INSULATION CAPS FOR VALVES

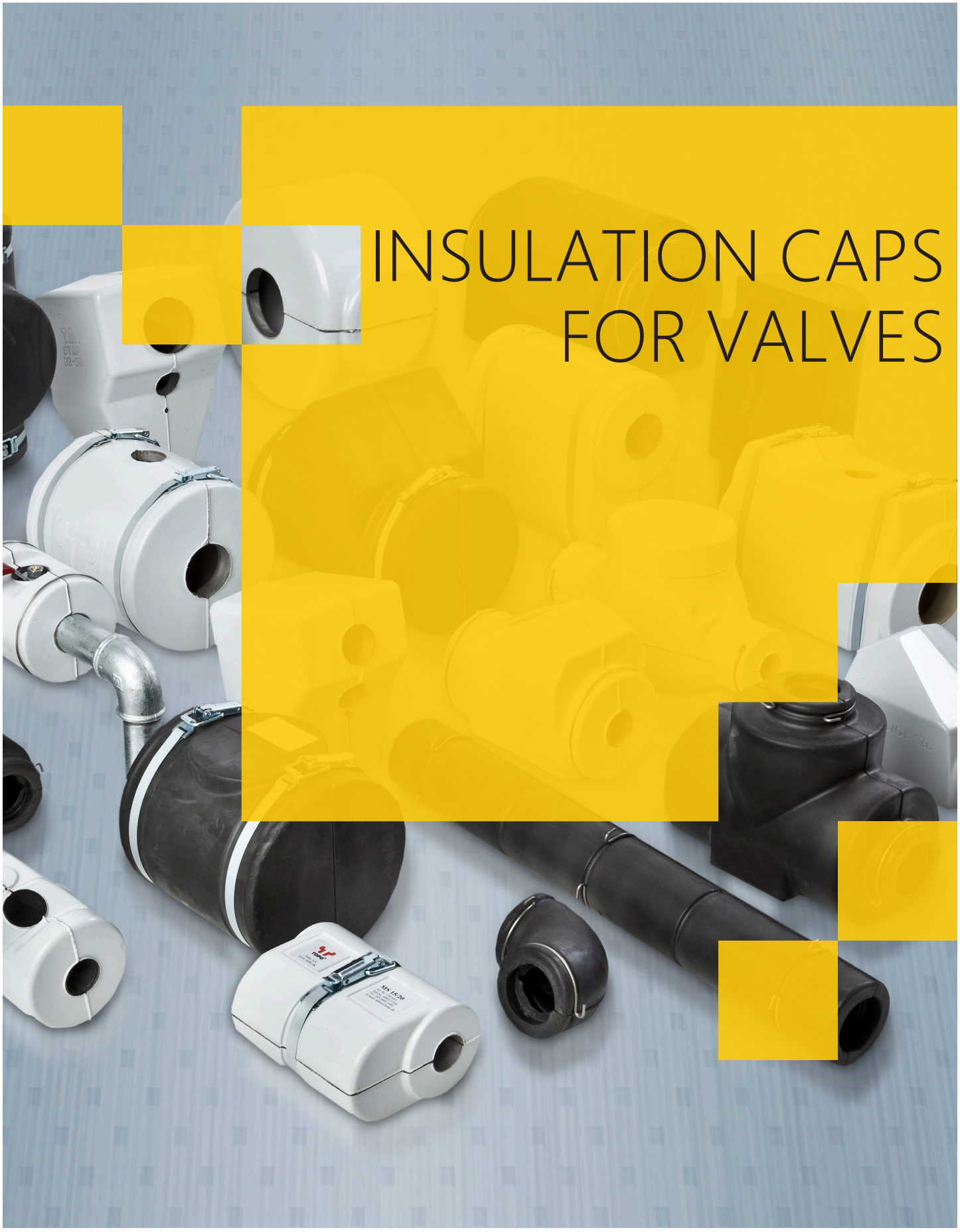

TOPO®

TiNBY

THE ENERGY SAVING AND ASSEMBLY FRIENDLY INSULATION CAP SYSTEM

Polyurethane (PUR) is a type of plastic with particularly good insulating properties. Both cold and heat insulating, the foam is used in a variety of products and in the construction industry. If the insulating capacity plays a particularly important role, the low lambda value of less than 0.024 W / mK results in large energy savings. As duroplastic (hardened PUR) it can be formed into numerous shapes..

One of our best known products is the insulating cap. It is used for the insulation of venues and district heating installations. In addition, heat-insulating polyurethane is installed as insulating components in window profiles and strips.

Tinby offers a range of insulation caps for almost every manufacturer and fitting. All cut-outs are made at the factory so that they can be mounted on site with just one hand. Maintenance work can be carried out easily and quickly in this way. The high quality of the insulating caps reduces the wear of the individual components even with frequent changes.

A uniform overall picture of the system insulation is provided by various surfaces: All insulating caps are available in polystyrene (PS) or aluminum coarse grain sheet, deep-drawn (AL).

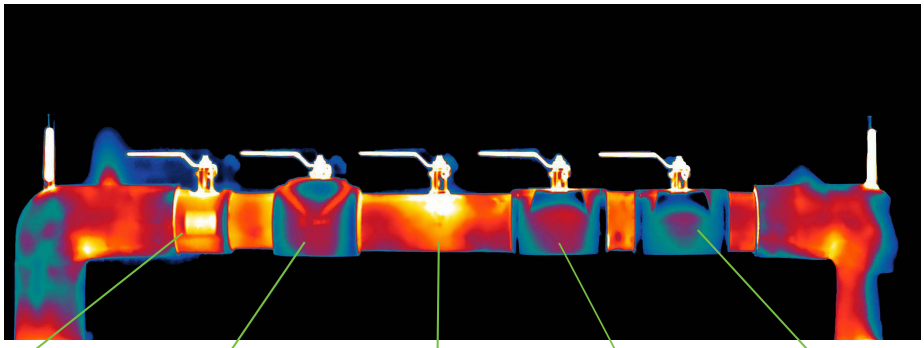

EPP	PE	Mineral wool	STANDARD PUR	PUR ENERGY+

EXTREMELY SHORT
PAYBACK TIME

- ***ENERGY-EFFICIENT***
- ***COST-EFFICIENT***
- ***EASY INSTALLATION/DISMANTLING***

achieve a break-even point in less than 2 years

CONTENTS

Product information Energy Box ALU und Energy Box PS 4-5
Product information TOPO and DHS series for district heating valves 32-33
Type and fitting manufacturer overview 6-8
Arrangement of draining angle seat valves 10
SVM for angle seat valves with socket connection 11
SVK for angle seat valve MNG combination II and III 12
OMG for balancing valves in sleeve design 13
USV universal insulation cap for all standard angle seat valves 14
UKM universal insulating cap for all common ball valves with socket connection 15
HCM for TA balancing valves 16
HSG for circulation valve with socket connection 17
KHM for heating ball valves with socket connection 18
PKH for pump ball valves 19
GVM for gate valves and straight seat valves with socket connection 20
DWM for all standard three-way valves with threaded connection 21
SFM for mud flaps in sleeve design 22
BSC for KSB-Boa Super Compact 23
FPA for flanged pairs and blind flanges 24
DWV for three-way control valves with flange connection 25
FKL for butterfly valves and flap check valves 26
FVK for flanged valves in short design (F 4) 27
FVL for long flange valves (F 1) 28
SVF for strainer in flange connection 29
Price list Energy Box ALU and Energy Box PS 30-31
DHS AK for butterfly valves with flange connection in the district and local heating area 34
DHS MS for angle seat valves with threaded connection in the remote and local heat range 34
DHS B for tubular elbows in the district and local heating area 35
DHS R for pipe sections in the district and local heating area 35
DHS DM for three-way valves with threaded connection in the district and local heating area 36
DHS F 36
DHS FL 37
DHS KH for ball valves with short lockers and threaded connection in the district and local heating area 37
TOPO MS for mud flaps with sleeves 38
TOPO ME for diaphragm valves with sleeves 38
TOPO FV for straight seat / piston valves with flanges 39
TOPO HT for ball valves of short overall length with flanges 39
TOPO FS for angle seat valves and strainers with flanges 40
TOPO FK for ball valves, diaphragm valves and relubricated taps 40
TOPO MSC for angle seat valves with sleeves 41
TOPO MN for angle seat control valves with sockets 41
TOPO K for ball valves with sockets and weld connection 42
TOPO M for valves with servomotor, poppet valves, check valves and check valves 42
TOPO AK for shut-off valves 43
TOPO T for water and heat meters 43
TOPO MV for shut-off valves and valves with sleeves 44
TOPO OM 44
TOPO S for gate valves of short overall length 45
TOPO KS for smaller ball valves with threaded sockets 45
Price list Serie DHS and Serie TOPO 47-48
Contact Informatio 49
Terms of Service 50

ENERGY BOX ALU

Insulation corresponding to EnEV consisting of two molded foam half shells with sheathing made of aluminum coarse grain sheet metal, which are fixed with guide elements (tongue and groove system) and clamping straps. The surface of the Energy Box in ALU design is diffusion-tight. It can therefore also be used for the cold water area. At media temperatures below 12 ° C, all joints and joints must be protected against condensation by being carefully taped with aluminum adhesive tape; eventually it may additionally be sealed with silicone.

Insulation	
Material:	PUR-Foam
Insulation capability:	0,024 W/m*K
Weight:	60 kg/m³ +/- 5
Temperature for insulation:	max. +130° C
Fire class accordingly: DIN 4102:	B2, normal inflammable (highest possible classification for PUR foam!)

Insulation shell	
Material:	Aluminium foil (AL)
Farbe:	metall color, Aluminium
Fire class accordingly: DIN 4102:	A, not flammable

CONNECTION TECHNOLOGY

Tongue and groove system and outside clamping tongue / bands made of corrosion-resistant material

ENERGY BOX PS

The EnEV-compliant insulation consisting of two molded foam PUR half shells with PS sheath, which are fixed with guide elements (tongue and groove system) and straps. At media temperatures below 12 ° C, all joints and joints must be protected against condensation by being carefully sealed with silicone.

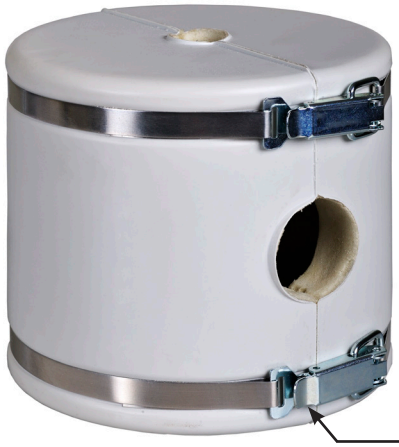

PUR-Foam
Lambda = 0,024
Brandklasse B 2

Tensioning bands / tension springs made of corrosion-resistant material

Insulation

Material:	PUR-foam
Insulation capability:	0,024 W/m*K
Weight:	60 kg/m³ +/- 5
Temperature for insulation:	max. +130° C
Fire class accordingly: DIN 4102:	B2, normal entflammbar (höchstmögliche Einstufung für PUR-Schaum!)

Shell

Material:	Plastic
Color:	grey (RAL 7035)
Fire class accordingly: DIN 4102:	B1, schwer entflammbar

CONNECTION TECHNOLOGY

Tongue and groove system and outside clamping tongue / bands made of corrosion-resistant material

TYPE OVERVIEW WITH SCREW AND SOCKET CONNECTION

Series GVM
for gate valves, straight seat valves and check valves with socket connection

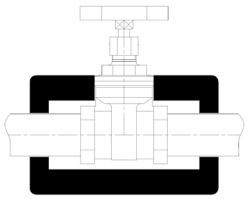

Series HCM
for TA rotary seat valves in sleeve design

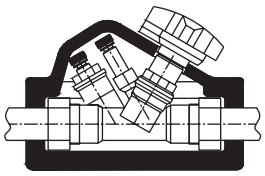

Series HSG
Kemper Mulitherm, Heimeier-Stra-to and Heimeier-Vario

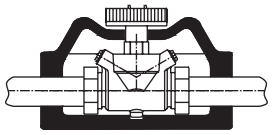

Series KHM
for ball valves with socket connection

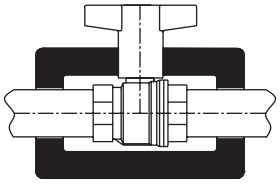

Series PKH
for pump ball valves

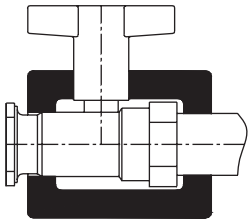

Series SFM
Strainers and check valves in sleeve design

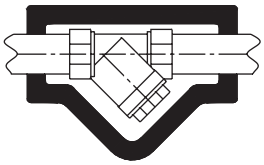

Series SFM
Strainers and check valves in sleeve design

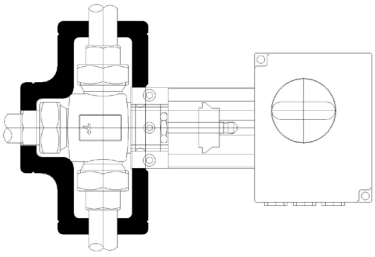

Series UKM
for all common ball valves

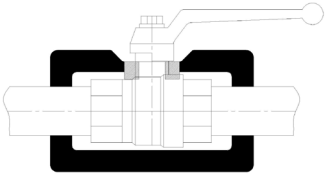

Series UPS
all common angle seat valves

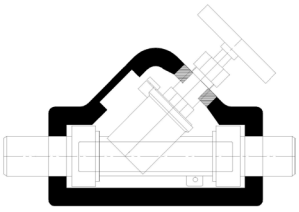

Series SVK
for angle seat valve MNG-Kombi II and III

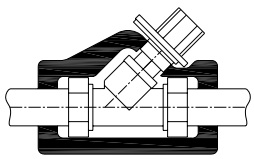

Series SVM
for valves with angularly seated spindle and socket connection

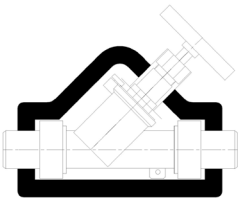

Series OMG
for Oventrop Hydrocontrol with socket connection

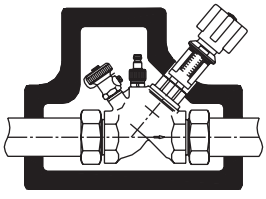

TYPE OVERVIEW WITH FLANGE CONNECTION

Series BSC
for KSB
Boa Super Compact

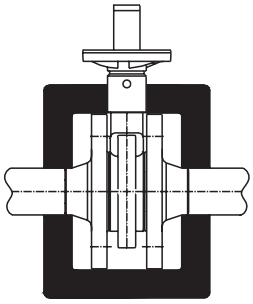

Series FPA
for bottle pairs and
blind flanges

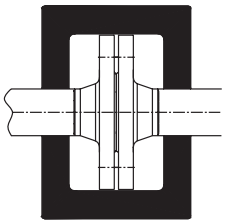

Series DWV
for three-way control
valves with flanged
connection

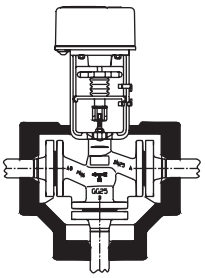

Series FKL
for butterfly valves, flap
check valves and
compensators

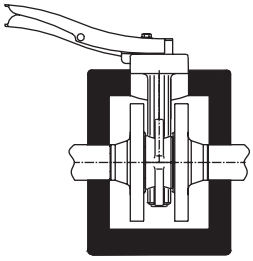

Series FVK
for short ball, diaphragm,
straight seat and flange valves
to DIN length F4

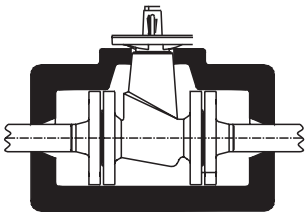

Series FLV
for long ball, diaphragm, straight
seat and flange valves to DIN length
F1

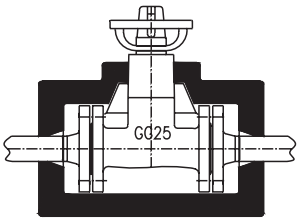

Series SVF
for strainers, angle seat and free-
flow valves with flange connection

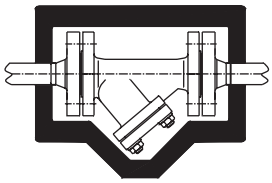

VALVE OVERVIEW

ABA BEUL		Typ
	Piston valve with threaded connection	GVM
	Regulating valve with threaded connection	SVK
ARI		
	Shut-off valve Euro Wedi, FTF 1	FVL
	Shut-off valve Euro Wedi, AGV 14	FVK
	Shut-off valve FABA-Plus, FTF 1	FVL
	Line regulating valve Astra, FTF 1	FVL
	Check valve with flange connection	SVF
	Dirt trap with flange connection	SVF
	Disc check valve CHECKO-D	FKL
	Butterfly valve type ZESA	FKL
	Butterfly valve type GESA	FKL
Bender		
	Straight seat valve with threaded connection	GVM
	Angle seat valve with threaded connection	USV
	Strainer with threaded connection	SFM
	Ball valve with threaded connection	UKM
	Piston spool with threaded connection	GVM
Böhmer		
	Ball valve with threaded connection	UKM
Broen		
	Ball valve with threaded connection	UKM
Bruse		
	Angle seat valve with threaded connection	USV
	Ball valve with threaded connection	UKM
DANFOSS		
	Control valve Three-way flange	DWV
	Control valve two-way flange	FVL
	Control valve Three-way sleeve	DWM
	Control valve white way sleeve	GVM
	Dirt trap with flange connection	SVF
	String valves with threaded connection	HCM
DURAMAR		
	Ball valve with threaded connection	UKM
	Angle seat valve with threaded connection	USV
	Sleeve slide, check valve	GVM
	Pump slide with threaded connection	PKH
EBRO Armaturen		
	Butterfly valve type Z 011	FKL
	Check valve type RSK	FKL
	Backflow barrier type RV 10	SVF
FROMME Armaturen		
	Wedge flat slide, FTF 14	FVK
	Through valve, FTF 1	FVL
	Strainer	SVF
G-Bee		
	Ball valve with threaded connection	UKM
GEFA		
	Butterfly valves	FKL
	Ball valve with threaded connection	KHM

GESTRA		
	Gravity circulation	FKL
	DISCO check valve	FKL
	Strainer with threaded connection	SFM
	Dirt catcher with flange connection	SVF
	Intermediate flange Strainer SZ	FKL
	Shut-off valves GAV	FVL
GIACOMINI		
	Ball valve with threaded connection	UKM
	Gate valve	GVM
	Strainer with threaded connection	SFM
	Check valve with threaded connection	SFM
HERMANN SCHMIDT		
	Gate valve	GVM
	Angle seat valve with threaded connection	USV
	Check valve with threaded connection	SFM
	Strainer with threaded connection	SFM
	Ball valve with threaded connection	UKM
HONEYWELL		
	Strainer with threaded connection	SFM
	Dirt trap with flange connection	SVF
	Free-flow valve Alwa	USV
	Throttle valve Alwa-Kombi-4	SVK
	MNG KOMBI III Plus	SVK
	MNG KOMBI II (without emptying)	SVK
	Line regulating and shut-off valve Kombi-F	FVL
	Ring throttle	FKL
	Centra through valve flange	FVL
	Centra through valve thread	GVM
	Centra three-way mixer with sleeve	DWM
	Centra three-way mixer with flange	DWV
	Centra three-way valve flange	DWV
	Centra three-way valve thread	DWM
IMT		
	Ball valve with threaded connection	UKM
	Strainer with threaded connection	SFM
	Check valve with threaded connection	SFM
JRG Gunzenhauser		
	Gate valve	GVM
	Ball valve with threaded connection	UKM
	Angle seat valve with threaded connection	USV
KEMPER		
	Flange fittings, FTF1	FVL
	Angle seat valve with flange connection	SVF
	Sleeves straight seat	GVM
	Multi-Therm Circulation Control Valve	HSG
	Combined backflow preventer	SVM
	Multi-Fix Circulation Control Valve	SVK
	Angle seat valve without draining	USV
	Angle seat valve with drain	OMG
	Strainer with threaded connection	SFM

VALVE OVERVIEW

KIEBACK+PETER	
3-way valve with flange connection	DWV
2-way valve with flange connection	FVL
3-way valve with threaded connection	DWM
2-way valve with threaded connection	GVM

KLINGER	
Kugelhahn mit Gewindeanschluss	UKM
Kolbenschieberventil, FTF1	FVL

KSB	
Control valve BOA-Control SAR	HCM
Shut-off valve BOA-Super-Compact	BSC
Shut-off valve BOA-Compact, FTF14	FVK
Shut-off valve BOA-Compact IMS, FTF14	FVK
Shut-off valve BOA-W, FTF1	FVL
Shut-off valve BOA-H, FTF1	FVL
Diaphragm valve Sisto, FTF1	FVL
Butterfly valve BOAX-S	FKL
Strainer BOA-S	SVF
Check valve BOA-R	SVF
Check valve BOA-RVK	FKL

LANDIS & STAEFA	
3-way valve with flange connection	DWV
2-way valve with flange connection	FVL
3-way valve with threaded connection	DWM
2-way valve with threaded connection	GVM

LUDEMANN	
Strainer with flange connection	SVF
Ball valve with threaded connection	UKM

OVENTROP	
Line regulating valve Hydrocontrol	OMG
Flange control valve Hydrocontrol	SVF
Balancing valve Hycocon	HSG
Differential pressure regulator Hydromat	auf Anfrage
Ball valve with threaded connection	UKM
Straight seat valve with threaded connection	GVM
Angle seat valve with threaded connection	USV
Butterfly valve center flange version	FKL
Butterfly valve intermediate construction version	FKL
Check valve with threaded connection	SFM
Check valve with flange connection	SVF
check valve	FKL
Intermediate version Strainer with flange connection	SVF
Strainer with threaded connection	SFM
Aquastrom free-flow valves	OMG
Aquastrom free-flow valves with flange	SVF

ROSSWEINER	
Piston valve with threaded connection	GVM
Circulation valve with threaded connection	SVK

SAUTER	
Throttle intermediate construction version	FKL
3-way valve with flange connection	DWV
2-way valve with flange connection	FVL
3-way valve with threaded connection	DWM
2-way valve with threaded connection	GVM

SCHLÖSSER	
Free-flow valve with threaded connection	USV
Non-return valve with threaded connection	SFM

SCHMIEDING Armaturen	
Angle seat valve with threaded connection	USV
Ball valve with threaded connection	UKM
Piston spool with threaded connection	GVM
Butterfly valve type ECLI	FKL

SCHUBERT+SALZER	
Angle seat valve with threaded connection	USV
3-way valve with threaded connection	DWM
Angle seat check valve	SFM
Strainer with threaded connection	SFM

SEPPELFRICKE	
Angle seat valve with threaded connection	SVK
Ball valve with threaded connection	UKM
Straight seat valve with threaded connection	GVM
Backflow preventer	SFM
Circulation valve	SFM

SFERATEC	
Ball valve with threaded connection	UKM
Sleeve slide with threaded connection	GVM
3-way valve with threaded connection	DWM

Samson	
3-way valve with flange connection	DWV
2-way valve with flange connection	FVL
Butterfly valve intermediate construction version	FKL

TA HEIMEIER	
Line regulating valve STAD / STAD-C / STAD-R	HCM
Zone control valve TBV-C	SVK
3-way valve with threaded connection	DWM
2-way valve with threaded connection	GVM
Shut-off valve STS	HCM
Ball valve Globo H	KHM
Pump ball valve Globo P + PS	PKH

TACONOVA	
Balancing valves Sleeve version	SFM
Balancing valves Flange design	SVF
3-way valve with threaded connection	DWM

Viega	
Angle seat valve with threaded connection Circulation regulating valve	USV HSG
Ball valve with threaded connection	UKM

Wiesa	
Ball valve with threaded connection	UKM
Muff gate valve	GVM
Muff strainer	SFM
Muff kickback door butterfly valve	SFM FKL

For the definition of the drainage hole
of our Energy Box

Emptying left in the direction of flow

When emptying on the left, please tick here

○

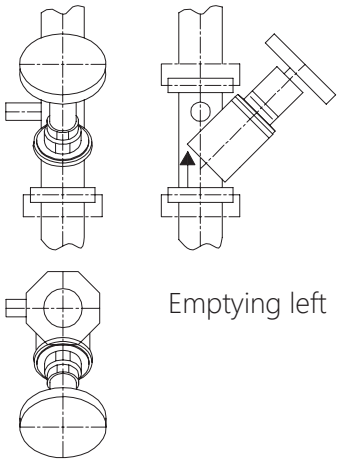

Emptying left

Emptying in the middle in the flow direction

When emptying in the middle, please tick here

○

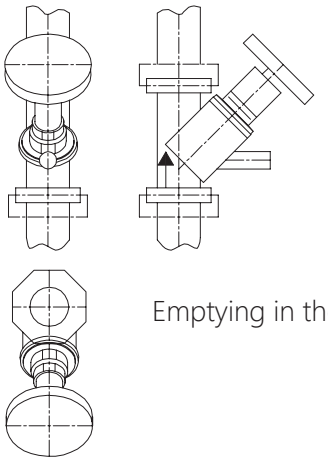

Emptying in the middle

Emptying right in the direction of flow

When emptying right, please tick here

○

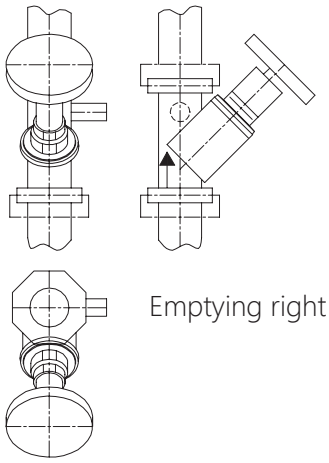

Emptying right

The existing drain hole can be determined on site and tick here in this form and fax us.
Then we will choose the right insulation cap for you.

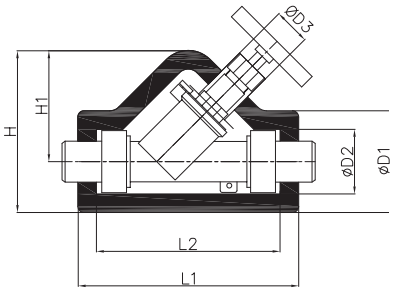

Valves	Makes / manufacturers
Free-flow valve alwa	MNG
Free flow angle seat valve	Kemper
Angle Seat Valve	Oventrop
Free-flow valve, angle seat valve	Seppelfricke

ALU SURFACE

Specification text Aluminum surface - Energy Box, Alu

Energy Box, aluminum for insulation in the range up to +130 degrees Celsius of the series SVM for valves with inclined spindle and check valves with socket connection. In accordance with the EnEV, consisting of two PUR half-shells encased in aluminum coarse grain sheet metal and fixed with straps.

Maße in mm											
Art.-Nr.	DN	Zoll	L1	L2	D1	D2	D3	H	H1	Gewicht (g)	Price in EURO
SVM-AL-010	10	⅜"	104	80	54	30	22	81	54	90	20,70
SVM-AL-015	15	½"	138	114	61	37	22	98	69	105	21,30
SVM-AL-020	20	¾"	155	125	77	47	29	121	82	115	21,60
SVM-AL-025	25	1"	178	148	82	52	29	131	90	135	24,60
SVM-AL-032	32	1 ¼"	202	162	104	64	29	160	105	190	26,90
SVM-AL-040	40	1 ½"	224	174	120	70	29	186	125	280	29,20
SVM-AL-050	50	2"	248	188	141	82	29	223	153	480	33,30

Dimension D3 is adjusted depending on the valve

PS SURFACE

Tender specification PS surface - Energy Box, PS

Energy Box, PS for insulation in the range up to +130 degrees Celsius of the series SVM for valves with inclined spindle and check valves with socket connection. According to the EnEV, consisting of two PUR half-shells, which are covered with PS foil and fixed with straps.

Maße in mm											
Art.-Nr.	DN	Zoll	L1	L2	D1	D2	D3	H	H1	Gewicht (g)	Price in EURO
SVM-PS-010	10	⅜"	104	80	54	30	22	81	54	90	16,40
SVM-PS-015	15	½"	138	114	61	37	22	98	69	105	16,70
SVM-PS-020	20	¾"	155	125	77	47	29	121	82	115	17,50
SVM-PS-025	25	1"	178	148	82	52	29	131	90	135	19,80
SVM-PS-032	32	1 ¼"	202	162	104	64	29	160	105	190	21,60
SVM-PS-040	40	1 ½"	224	174	120	70	29	186	125	280	24,30
SVM-PS-050	50	2"	248	188	141	82	29	223	153	480	27,30

Dimension D3 is adjusted depending on the valve

SERIE SVK

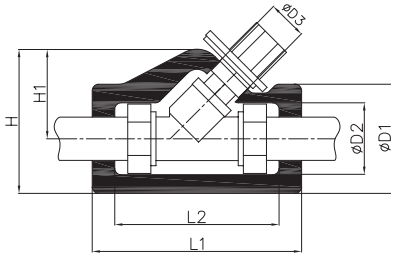

Valves	Makes / manufacturers
Angle seat valve Kombi II + III	MNG
Regulating valve	ABA Beul
Circulation regulating valve	Kemper
Circulation valve	Rossweiner
Angle Seat Valve	Seppelfricke

ALU SURFACE

Specification text Aluminum surface - Energy Box, Alu

Energy Box, aluminum for insulation in the range up to +130 degrees Celsius of the series SVK for angle seat valve MNG Kombi II and Kombi III. In accordance with the EnEV, consisting of two PUR half-shells, which are coated with aluminum coarse grain sheet metal and fixed with straps.

Maße in mm											
Art.-Nr.	DN	Zoll	L1	L2	D1	D2	D3	H	H1	Gewicht (g)	Price in EURO
SVK-AL-010	10	⅜"	120	96	57	33	32	77	47	85	20,70
SVK-AL-015	15	½"	130	104	62	38	32	91	58	105	21,30
SVK-AL-020	20	¾"	139	113	71	45	32	104	67	115	21,60
SVK-AL-025	25	1"	163	128	85	56	32	112	69	120	24,60
SVK-AL-032	32	1 ¼"	184	147	99	59	40	137	86	135	26,90
SVK-AL-040	40	1 ½"	200	160	109	69	40	146	88	155	29,20
SVK-AL-050	50	2"	240	190	140	90	40	187	113	230	33,30

Dimension D3 is adjusted depending on the valve

PS SURFACE

Tender specification PS surface - Energy Box, PS

Energy Box, PS for insulation in the range up to +130 degrees Celsius of the series SVK for angle seat valve MNG Kombi II and Kombi III. According to the EnEV consisting of two PUR half-shells, which are coated with PS foil and fixed with straps.

Maße in mm											
Art.-Nr.	DN	Zoll	L1	L2	D1	D2	D3	H	H1	Gewicht (g)	Price in EURO
SVK-PS-010	10	⅜"	120	96	57	33	32	77	47	85	16,40
SVK-PS-015	15	½"	130	104	62	38	32	91	58	105	16,70
SVK-PS-020	20	¾"	139	113	71	45	32	104	67	115	17,50
SVK-PS-025	25	1"	163	128	85	56	32	112	69	120	19,80
SVK-PS-032	32	1 ¼"	184	147	99	59	40	137	86	135	21,60
SVK-PS-040	40	1 ½"	200	160	109	69	40	146	88	155	24,30
SVK-PS-050	50	2"	240	190	140	90	40	187	113	230	27,30

Dimension D3 is adjusted depending on the valve

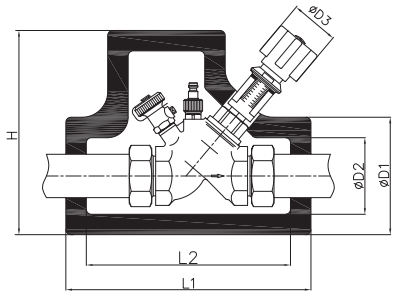

Valves	Makes / manufacturers
Balancing valve Hydrocontrol	Oventrop
Aquastrom Free-flow valve	Oventrop
Alu ALWA K + ALWA KFR	MNG

ALU SURFACE

Specification text Aluminum surface - Energy Box, Alu

Energy Box, aluminum for insulation in the range up to +130 degrees Celsius of the series OMG for Oven-trop Hydrocontrol in sleeve design. In accordance with the EnEV, consisting of two PUR half-chalices encased in aluminum coarse grain sheet metal and fixed with straps.

Maße in mm										
Art.-Nr.	DN	Zoll	L1	L2	D1	D2	D3	H	Gewicht (g)	Price in EURO
OMG-AL-010	10	⅜"	180	155	70	46	-	145	90	22,10
OMG-AL-015	15	½"	180	155	70	46	-	145	90	22,80
OMG-AL-020	20	¾"	200	170	85	55	-	156	125	23,20
OMG-AL-025	25	1"	200	170	85	55	-	156	125	26,40
OMG-AL-032	32	1 ¼"	240	200	115	75	-	200	150	28,70
OMG-AL-040	40	1 ½"	250	205	135	75	-	210	190	31,40
OMG-AL-050	50	2"	265	210	150	90	-	245	210	35,40
OMG-AL-065	65	2 ½"	280	220	175	105	-	255	270	42,90

Dimension D3 is adjusted depending on the valve

PS SURFACE

Tender specification PS surface - Energy Box, PS

Energy Box, PS for insulation in the range up to +130 degrees Celsius of the OMG series for Oven-trop Hydrocontrol in sleeve design. According to the EnEV, consisting of two PUR half-shells, which are covered with PS foil and fixed with straps.

Maße in mm										
Art.-Nr.	DN	Zoll	L1	L2	D1	D2	D3	H	Gewicht (g)	Price in EURO
OMG-PS-010	10	⅜"	180	155	70	46	-	145	90	18,30
OMG-PS-015	15	½"	180	155	70	46	-	145	90	19,00
OMG-PS-020	20	¾"	200	170	85	55	-	156	125	19,00
OMG-PS-025	25	1"	200	170	85	55	-	156	125	21,80
OMG-PS-032	32	1 ¼"	240	200	115	75	-	200	150	23,30
OMG-PS-040	40	1 ½"	250	205	135	75		210	190	25,30
OMG-PS-050	50	2"	265	210	150	90	-	245	210	27,80
OMG-PS-065	65	2 ½"	280	220	175	105	-	255	270	36,90

Dimension D3 is adjusted depending on the valve

SERIE USV

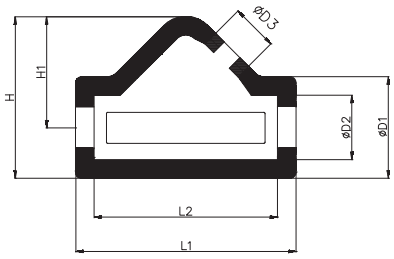

Valves	Makes / manufacturers
All common angle seat valves	

PS SURFACE

Specification text Aluminum surface - Energy Box, PS

Energy Box, PS for insulation in the range up to +130 degrees Celsius of the series UPS for all common valves with angularly arranged spindle and drains with socket connection. According to the EnEV consisting of two PUR half-shells, which are coated with PS foil and fixed with straps.

Maße in mm											
Art.-Nr.	DN	Zoll	L1	L2	D1	D2	D3	H	H1	Gewicht (g)	Price in EURO
USV-PS-010	10	⅜"	104	80	54	30	22	81	54	90	18,30
USV-PS-015	15	½"	138	114	61	37	22	98	69	105	19,00
USV-PS-020	20	¾"	155	125	77	47	29	121	82	115	19,00
USV-PS-025	25	1"	178	148	82	52	29	131	90	135	21,80
USV-PS-032	32	1 ¼"	202	162	104	64	29	160	105	190	23,30
USV-PS-040	40	1 ½"	224	174	120	70	29	186	125	280	25,30
USV-PS-050	50	2"	248	188	141	82	29	223	153	480	27,80

Dimension D3 is adjusted depending on the valve

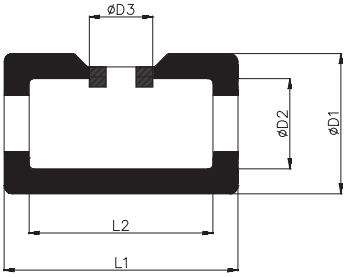

Valves	Makes / manufacturers
All common ball valves with socket connection	

PS SURFACE

Specification text Aluminum surface - Energy Box, PS

Energy Box, PS for insulation in the range up to +130 degrees Celsius of the series UKM for all common ball valves with socket connection. According to the EnEV, consisting of two PUR half-shells, which are covered with PS foil and fixed with straps.

Maße in mm									
Art.-Nr.	DN	Zoll	L1	L2	D1	D2	D3	Gewicht (g)	Price in EURO
UKM-PS-010	10	⅜"	101	77	54	30	29	50	16,40
UKM-PS-015	15	½"	121	97	62	38	29	65	16,70
UKM-PS-020	20	¾"	139	109	74	44	29	90	17,50
UKM-PS-025	25	1"	155	125	85	55	29	115	19,80
UKM-PS-032	32	1 ¼"	209	169	106	66	29	135	21,60
UKM-PS-040	40	1 ½"	185	135	125	75	35	125	24,30
UKM-PS-050	50	2"	220	160	156	96	35	290	27,30

Dimension D3 is adjusted depending on the valve

SERIE HCM

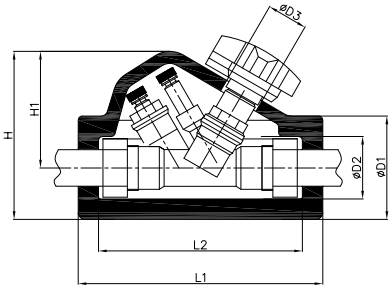

Valves	Makes / manufacturers
Line regulating valves STS, STAD, STAM, STAP	TA Heimeier
Threaded rope valves	Danfoss
Control valve BOA-Control SAR	KSB

ALU SURFACE

Specification text Aluminum surface - Energy Box, Alu

Energy Box, aluminum for insulation in the range up to +130 degrees Celsius of the HCM series for TA-ST regulating valves in sleeve design. In accordance with the EnEV, consisting of two PUR half-chalices encased in aluminum coarse grain sheet metal and fixed with straps.

Maße in mm

Art.-Nr.	DN	Zoll	L1	L2	D1	D2	D3	B	H	H1	Gewicht (g)	Price
HCM-AL-010	10	⅜"	180	150	76	46	29	116	124	85	90	22,10
HCM-AL-015	15	½"	180	150	76	46	29	116	124	85	90	22,80
HCM-AL-020	20	¾"	180	150	76	46	29	116	124	85	90	23,20
HCM-AL-025	25	1"	200	170	84	54	29	126	136	94	125	26,40
HCM-AL-032	32	1 ¼"	230	190	99	59	29	135	153	103	150	28,70
HCM-AL-040	40	1 ½"	250	205	122	72	29	143	179	118	190	31,40
HCM-AL-050	50	2"	291	241	125	95	29	166	178	116	210	35,40

Dimension D3 is adjusted depending on the valve

PS SURFACE

Tender specification PS surface - Energy Box, PS

Energy Box, PS for insulation in the range up to +130 degrees Celsius of the HCM series for TA-ST regulating valves in sleeve design. According to the EnEV, consisting of two PUR half-shells, which are covered with PS foil and fixed with straps.

Maße in mm

Art.-Nr.	DN	Zoll	L1	L2	D1	D2	D3	B	H	H1	Gewicht (g)	Price
HCM-PS-010	10	⅜"	180	150	76	46	29	116	124	85	90	18,30
HCM-PS-015	15	½"	180	150	76	46	29	116	124	85	90	19,00
HCM-PS-020	20	¾"	180	150	76	46	29	116	124	85	90	19,00
HCM-PS-025	25	1"	200	170	84	54	29	126	136	94	125	21,80
HCM-PS-032	32	1 ¼"	230	190	99	59	29	135	153	103	150	23,30
HCM-PS-040	40	1 ½"	250	205	122	72	29	143	179	118	190	25,30
HCM-PS-050	50	2"	291	241	125	95	29	166	178	116	210	27,80

Dimension D3 is adjusted depending on the valve

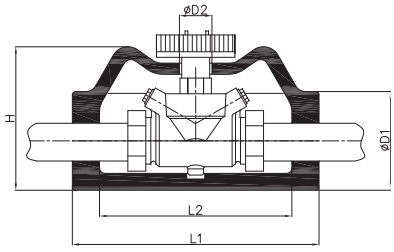

Valves	Makes / manufacturers
Multi-Therm Circulation Valve	Kemper
Flow Control Valve Hycocon	Oventrop
Circulation Control Valve	Viega

ALU SURFACE

Specification text Aluminum surface - Energy Box, Alu

Energy Box, aluminum for insulation in the range up to +130 degrees Celsius of the HSG series for Kemper Multi-Therm. In accordance with the EnEV, consisting of two PUR half-shells encased with aluminum coarse grain sheet metal and fixed with straps.

Maße in mm										
Art.-Nr.	DN	Zoll	L1	L2	D1	D2	D3	H	Gewicht (g)	Price
HSG-AL-010	10	⅜"	220	190	73	27	-	113	140	23,70
HSG-AL-015	15	½"	220	190	73	27	-	113	140	23,90
HSG-AL-020	20	¾"	220	190	73	27	-	113	140	24,20
HSG-AL-025	25	1"	220	172	88	27	-	128	140	26,90
HSG-AL-032	32	1 ¼"	228	182	105	29	-	138	180	29,30
HSG-AL-040	40	1 ½"	241	197	122	29	-	152	240	30,80
HSG-AL-050	50	2"	247	197	148	29	-	178	240	35,40

Dimension D3 is adjusted depending on the valve

PS SURFACE

Tender specification PS surface - Energy Box, PS

Energy Box, PS for insulation up to +130 degrees Celsius of the HSG series for Kemper Multi-Therm. In accordance with the EnEV consisting of two PUR half-shells, which are jacketed with PS foil and fixed with straps.

Maße in mm										
Art.-Nr.	DN	Zoll	L1	L2	D1	D2	D3	H	Gewicht (g)	Price
HSG-PS-010	10	⅜"	220	190	73	27	-	113	140	19,20
HSG-PS-015	15	½"	220	190	73	27	-	113	140	19,20
HSG-PS-020	20	¾"	220	190	73	27	-	113	140	19,20
HSG-PS-025	25	1"	220	172	88	27	-	128	140	21,90
HSG-PS-032	32	1 ¼"	228	182	105	29	-	138	180	23,70
HSG-PS-040	40	1 ½"	241	197	122	29	-	152	240	26,70
HSG-PS-050	50	2"	247	197	148	29	-	178	240	29,70

Dimension D3 is adjusted depending on the valve

SERIE KHM

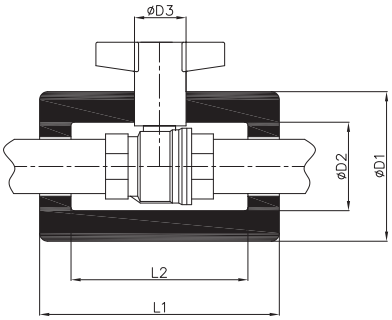

Valves	Makes / manufacturers
Ball valve, Globo H	Heimeier
Ball valve, Optibal	Oventrop

ALU SURFACE

Specification text Aluminum surface - Energy Box, Alu

Energy Box, aluminum for insulation in the range up to +130 degrees Celsius of the series KHM for heating ball valves with socket connection. In accordance with the EnEV, consisting of two PUR half-shells, which are coated with aluminum coarse grain sheet metal and fixed with straps.

Maße in mm									
Art.-Nr.	DN	Zoll	L1	L2	D1	D2	D3	Gewicht (g)	Price
KHM-AL-010	10	⅜"	101	77	54	30	29	50	16,60
KHM-AL-015	15	½"	121	97	62	38	29	65	17,90
KHM-AL-020	20	¾"	139	109	74	44	29	90	18,60
KHM-AL-025	25	1"	155	125	85	55	29	115	20,30
KHM-AL-032	32	1 ¼"	209	169	106	66	29	135	24,50
KHM-AL-040	40	1 ½"	185	135	125	75	35	125	28,70
KHM-AL-050	50	2"	220	160	156	96	35	290	32,60

Dimension D3 is adjusted depending on the valve

PS SURFACE

Tender specification PS surface - Energy Box, PS

Energy Box, PS for insulation in the range up to +130 degrees Celsius of the series KHM for heating ball valves with socket connection. According to the EnEV consisting of two PUR half-shells, which are coated with PS foil and fixed with straps.

Maße in mm									
Art.-Nr.	DN	Zoll	L1	L2	D1	D2	D3	Gewicht (g)	Price
KHM-PS-010	10	⅜"	101	77	54	30	29	50	11,60
KHM-PS-015	15	½"	121	97	62	38	29	65	11,90
KHM-PS-020	20	¾"	139	109	74	44	29	90	12,50
KHM-PS-025	25	1"	155	125	85	55	29	115	14,10
KHM-PS-032	32	1 ¼"	209	169	106	66	29	135	17,00
KHM-PS-040	40	1 ½"	185	135	125	75	35	125	20,40
KHM-PS-050	50	2"	220	160	156	96	35	290	24,50

Dimension D3 is adjusted depending on the valve

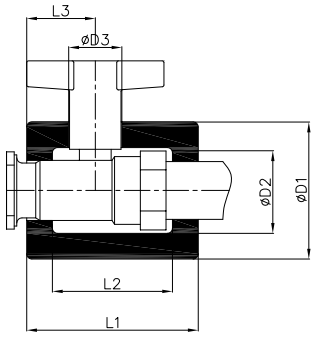

Valves	Makes / manufacturers
Pump ball valve Globo-P	Heimeier
Pump ball valve	Oventrop

ALU SURFACE

Specification text Aluminum surface - Energy Box, Alu

Energy Box, aluminum for insulation in the range up to +130 degrees Celsius of series PKH for pump-ball valves. In accordance with the EnEV, consisting of two PUR half-shells encased with aluminum coarse grain sheet metal and fixed with straps.

Maße in mm										
Art.-Nr.	DN	Zoll	L1	L2	L3	D1	D2	D3	Gewicht (g)	Price in EURO
PKH-AL-025	25/25	1 x 1"	100	70	37	80	50	29	70	18,60
PKH-AL-031	32/25	1 ¼ x 1"	110	80	45	102	62	29	75	20,30
PKH-AL-032	32/32	1 ¼ x 1 ¼"	110	80	45	102	62	29	75	24,50

Dimension D3 is adjusted depending on the valve

PS SURFACE

Tender specification PS surface - Energy Box, PS

Energy Box, PS for insulation in the range up to +130 degrees Celsius of series PKH for pump-ball valves. According to the EnEV consisting of two PUR half-shells, which are coated with PS foil and fixed with straps.

Maße in mm										
Art.-Nr.	DN	Zoll	L1	L2	L3	D1	D2	D3	Gewicht (g)	Price in EURO
PKH-PS-025	25/25	1 x 1"	100	70	37	80	50	29	70	12,50
PKH-PS-031	32/25	1 ¼ x 1"	110	80	45	102	62	29	75	14,10
PKH-PS-032	32/32	1 ¼ x 1 ¼"	110	80	45	102	62	29	75	16,90

Dimension D3 is adjusted depending on the valve

SERIE GVM

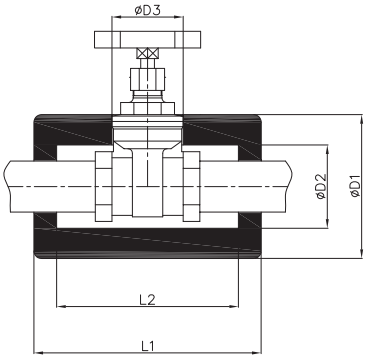

Valves	Makes / manufacturers
Piston valves with thread	ABA Beul
Straight seat valves & piston valves with thread	Bender
two-way control valve	Danfoss
Gate valve	Duramar
and all manufacturers to DIN length	

ALU SURFACE

Specification text Aluminum surface - Energy Box, Alu

Energy Box, aluminum for insulation in the range up to +130 degrees Celsius of the GVM series for gate valves, straight seat valves and non-return caps with socket connection. In accordance with the EnEV, consisting of two PUR half-shells encased in aluminum coarse grain sheet metal and fixed with straps.

Maße in mm									
Art.-Nr.	DN	Zoll	L1	L2	D1	D2	D3	Gewicht (g)	Price in EURO
GVM-AL-010	10	⅜"	99	75	64	34	-	75	20,70
GVM-AL-015	15	½"	99	75	64	34	-	80	21,30
GVM-AL-020	20	¾"	111	81	71	41	-	115	21,60
GVM-AL-025	25	1"	150	120	95	55	-	120	24,60
GVM-AL-032	32	1 ¼"	165	125	100	60	-	135	26,90
GVM-AL-040	40	1 ½"	180	130	115	65	-	160	29,20
GVM-AL-050	50	2"	215	155	150	90	-	300	33,30

Dimension D3 is adjusted depending on the valve

PS SURFACE

Tender specification PS surface - Energy Box, PS

Energy Box, PS for insulation in the range up to +130 degrees Celsius of the series GVM series for gate valves, straight seat valves and check caps with socket connection. According to the EnEV, consisting of two PUR half-shells, which are covered with PS foil and fixed with straps.

Maße in mm									
Art.-Nr.	DN	Zoll	L1	L2	D1	D2	D3	Gewicht (g)	Price in EURO
GVM-PS-010	10	⅜"	101	77	54	30	-	50	16,40
GVM-PS-015	15	½"	121	97	62	38	-	65	16,70
GVM-PS-020	20	¾"	139	109	74	44	-	90	17,50
GVM-PS-025	25	1"	155	125	85	55	-	115	19,80
GVM-PS-032	32	1 ¼"	209	169	106	66	-	135	21,60
GVM-PS-040	40	1 ½"	185	135	125	75	-	125	24,30
GVM-PS-050	50	2"	220	160	156	96	-	290	27,30

Dimension D3 is adjusted depending on the valve

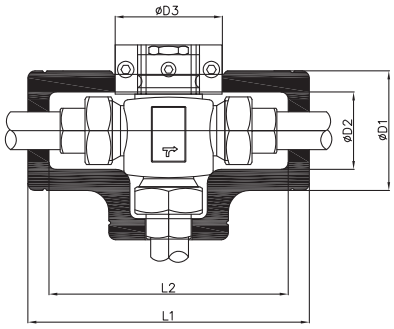

Valves	Makes / manufacturers
For all common three-way valves with threaded connection	

ALU SURFACE

Specification text Aluminum surface - Energy Box, Alu

Energy Box, aluminum for insulation in the range up to +130 degrees Celsius of the series DWM for three-way valves with socket connection. In accordance with the EnEV, consisting of two PUR half-shells encased in aluminum coarse grain sheet metal and fixed with straps.

Maße in mm									
Art.-Nr.	DN	Zoll	L1	L2	D1	D2	D3	Gewicht (g)	Price in EURO
DWM-AL-010	10	⅜"	101	77	54	30	29	50	23,70
DWM-AL-015	15	½"	121	97	62	38	29	65	23,90
DWM-AL-020	20	¾"	139	109	74	44	29	90	24,20
DWM-AL-025	25	1"	155	125	85	55	29	115	26,90
DWM-AL-032	32	1 ¼"	209	169	106	66	29	135	29,30
DWM-AL-040	40	1 ½"	185	135	125	75	35	125	30,80
DWM-AL-050	50	2"	220	160	156	96	35	290	35,40

Dimension D3 is adjusted depending on the valve

PS SURFACE

Tender specification PS surface - Energy Box, PS

Energy Box, PS for insulation in the range up to +130 degrees Celsius of the series DWM for three-way valves with socket connection. According to the EnEV consisting of two PUR half-shells, which are coated with PS foil and fixed with straps.

Maße in mm									
Art.-Nr.	DN	Zoll	L1	L2	D1	D2	D3	Gewicht (g)	Price in EURO
DWM-PS-010	10	⅜"	101	77	54	30	29	50	19,20
DWM-PS-015	15	½"	121	97	62	38	29	65	19,20
DWM-PS-020	20	¾"	139	109	74	44	29	90	19,20
DWM-PS-025	25	1"	155	125	85	55	29	115	21,90
DWM-PS-032	32	1 ¼"	209	169	106	66	29	135	23,70
DWM-PS-040	40	1 ½"	185	135	125	75	35	125	26,70
DWM-PS-050	50	2"	220	160	156	96	35	290	29,70

Dimension D3 is adjusted depending on the valve

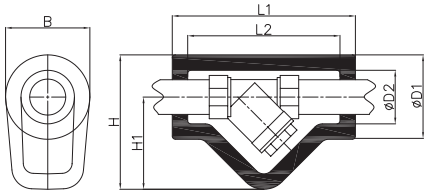

Valves	Makes / manufacturers
For all common strainers with threaded connection	

ALU SURFACE

Specification text Aluminum surface - Energy Box, Alu

Energy Box, aluminum for insulation in the range up to +130 degrees Celsius of the series SFM for mudguard in sleeve design. In accordance with the EnEV, consisting of two PUR half-shells encased in aluminum coarse grain sheet metal and fixed with straps.

Maße in mm											
Art.-Nr.	DN	Zoll	L1	L2	D1	D2	B	H	H1	Gewicht (g)	Price in EURO
SFM-AL-010	10	⅜"	104	80	54	30	54	81	54	95	21,30
SFM-AL-015	15	½"	138	114	61	37	61	98	69	105	21,60
SFM-AL-020	20	¾"	155	125	77	47	77	121	82	160	22,10
SFM-AL-025	25	1"	178	148	82	52	82	131	90	220	25,30
SFM-AL-032	32	1 ¼"	202	162	104	64	104	160	105	250	27,20
SFM-AL-040	40	1 ½"	224	174	120	70	120	186	125	300	29,40
SFM-AL-050	50	2"	248	188	141	82	141	223	153	500	34,80

Dimension D3 is adjusted depending on the valve

PS SURFACE

Tender specification PS surface - Energy Box, PS

Energy Box, PS for insulation in the range up to +130 degrees Celsius of the series SFM for dirt trap in sleeve design. According to the EnEV consisting of two PUR half-shells, which are coated with PS foil and fixed with straps.

Maße in mm											
Art.-Nr.	DN	Zoll	L1	L2	D1	D2	B	H	H1	Gewicht (g)	Price in EURO
SFM-PS-010	10	⅜"	104	80	54	30	54	81	54	95	16,40
SFM-PS-015	15	½"	138	114	61	37	61	98	69	105	16,70
SFM-PS-020	20	¾"	155	125	77	47	77	121	82	160	17,50
SFM-PS-025	25	1"	178	148	82	52	82	131	90	220	19,80
SFM-PS-032	32	1 ¼"	202	162	104	64	104	160	105	250	21,60
SFM-PS-040	40	1 ½"	224	174	120	70	120	186	125	300	24,30
SFM-PS-050	50	2"	248	188	141	82	141	223	153	500	27,30

Dimension D3 is adjusted depending on the valve

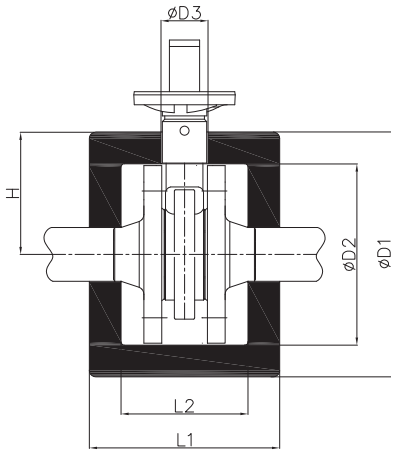

Valves	Makes / manufacturers
BOA Super Compact	KSB

ALU SURFACE

Specification text Aluminum surface - Energy Box, Alu

Energy Box, aluminum for insulation in the range up to +130 degrees Celsius of the series BSC for KSB - BOA Super Compact. In accordance with the EnEV, consisting of two PUR half-shells encased in aluminum coarse grain sheet metal and fixed with straps.

Maße in mm										
Art.-Nr.	DN	Zoll	L1	L2	D1	D2	D3	H	Gewicht (g)	Price in EURO
BSC-AL-015	15	½"	140	100	156	116	35	78	205	33,70
BSC-AL-020	20	¾"	140	100	156	116	35	78	205	35,90
BSC-AL-025	25	1"	140	100	163	123	35	82	215	37,20
BSC-AL-032	32	1 ¼"	165	115	193	143	35	97	410	40,00
BSC-AL-040	40	1 ½"	175	125	208	158	35	104	420	42,10
BSC-AL-050	50	2"	195	145	224	174	46	112	570	45,00
BSC-AL-065	65	2 ½"	220	160	254	194	48	127	590	50,80
BSC-AL-080	80	3"	265	185	292	212	54	146	830	61,40
BSC-AL-100	100	4"	300	210	317	227	64	159	870	73,60
BSC-AL-125	125	5"	340	240	355	255	83	178	980	87,00
BSC-AL-150	150	6"	365	265	395	295	83	198	1150	94,60

Dimension D3 is adjusted depending on the valve

PS SURFACE

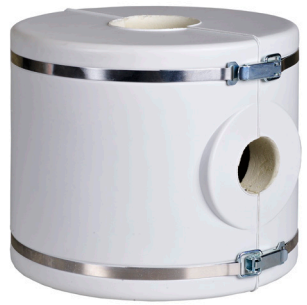

Tender specification PS surface - Energy Box, PS

Energy Box, PS for insulation in the range up to +130 degrees Celsius of the series BSC for KSB - BOA Super Compact. According to the EnEV consisting of two PUR half-shells, which are coated with PS foil and fixed with straps.

Maße in mm										
Art.-Nr.	DN	Zoll	L1	L2	D1	D2	D3	H	Gewicht (g)	Price in EURO
BSC-PS-015	15	½"	140	100	156	116	35	78	205	35,30
BSC-PS-020	20	¾"	140	100	156	116	35	78	205	36,70
BSC-PS-025	25	1"	140	100	163	123	35	82	215	37,70
BSC-PS-032	32	1 ¼"	165	115	193	143	35	97	410	44,60
BSC-PS-040	40	1 ½"	175	125	208	158	35	104	420	49,00
BSC-PS-050	50	2"	195	145	224	174	46	112	570	54,70
BSC-PS-065	65	2 ½"	220	160	254	194	48	127	590	64,20
BSC-PS-080	80	3"	265	185	292	212	54	146	830	74,70
BSC-PS-100	100	4"	300	210	317	227	64	159	870	85,40
BSC-PS-125	125	5"	340	240	355	255	83	178	980	97,00
BSC-PS-150	150	6"	365	265	395	295	83	198	1150	106,20

Dimension D3 is adjusted depending on the valve

SERIE FPA

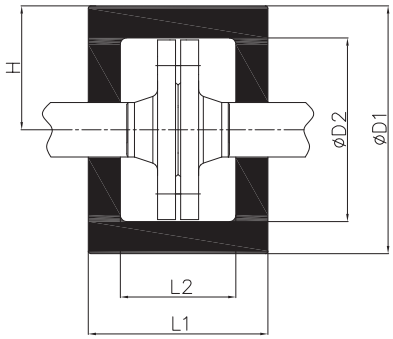

Valves	Makes / manufacturers
Flanges couples	
Blind flanges	

ALU SURFACE

Specification text Aluminum surface - Energy Box, Alu

Energy Box, aluminum for insulation in the range up to +130 degrees Celsius of the FPA series for flank pairs and blind flanges. In accordance with the EnEV, consisting of two PUR half-shells encased in aluminum coarse grain sheet metal and fixed with straps.

Maße in mm									
Art.-Nr.	DN	Zoll	L1	L2	D1	D2	H	Gewicht (g)	Price in EURO
FPA-AL-015	15	½"	123	83	156	116	78	190	32,90
FPA-AL-020	20	¾"	123	83	156	116	78	190	33,00
FPA-AL-025	25	1"	123	83	163	123	81,5	200	33,50
FPA-AL-032	32	1 ¼"	140	90	193	143	96,5	380	34,50
FPA-AL-040	40	1 ½"	144	94	208	158	104	395	37,60
FPA-AL-050	50	2"	150	100	224	174	112	405	39,40
FPA-AL-065	65	2 ½"	160	100	254	194	127	455	50,20
FPA-AL-080	80	3"	190	110	292	212	146	750	57,40
FPA-AL-100	100	4"	204	114	317	227	158	805	63,20
FPA-AL-125	125	5"	210	110	355	255	177	900	71,30
FPA-AL-150	150	6"	215	115	395	295	197	1000	80,00

Dimension D3 is adjusted depending on the valve

PS SURFACE

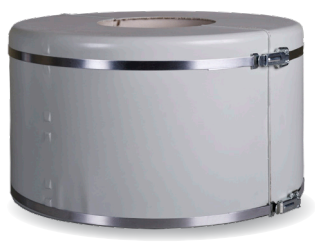

Tender specification PS surface - Energy Box, PS

Energy Box, PS for insulation in the range up to +130 degrees Celsius of the FPA series for flank pairs and blind flanges. According to the EnEV consisting of two PUR half-shells, which are coated with PS foil and fixed with straps

Maße in mm									
Art.-Nr.	DN	Zoll	L1	L2	D1	D2	H	Gewicht (g)	Price in EURO
FPA-PS-015	15	½"	123	83	156	116	78	190	26,80
FPA-PS-020	20	¾"	123	83	156	116	78	190	26,90
FPA-PS-025	25	1"	123	83	163	123	81,5	200	27,30
FPA-PS-032	32	1 ¼"	140	90	193	143	96,5	380	28,50
FPA-PS-040	40	1 ½"	144	94	208	158	104	395	31,30
FPA-PS-050	50	2"	150	100	224	174	112	405	34,20
FPA-PS-065	65	2 ½"	160	100	254	194	127	455	42,30
FPA-PS-080	80	3"	190	110	292	212	146	750	48,40
FPA-PS-100	100	4"	204	114	317	227	158	805	53,50
FPA-PS-125	125	5"	210	110	355	255	177	900	60,00
FPA-PS-150	150	6"	215	115	395	295	197	1000	67,50

Dimension D3 is adjusted depending on the valve

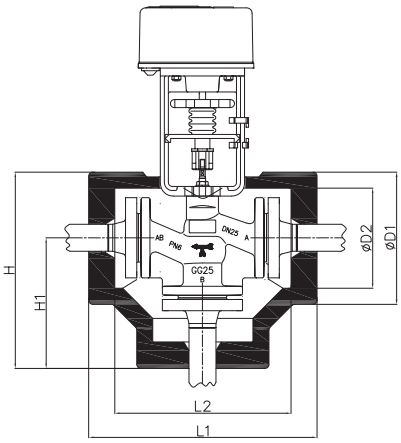

Valves	Makes / manufacturers
Three-way flange control valve	Danfoss
Three-way mixer with flange connection	Honeywell
Three-way valve with flange connection	Honeywell
Three-way valve with flange connection	Kieback + Peter
Three-way valve with flange connection	Landis & Staefa

ALU SURFACE

Specification text Aluminum surface - Energy Box, Alu

Energy Box, aluminum for insulation in the range up to +130 degrees Celsius of the series DWV for three-way valves with flange connection. In accordance with the EnEV, consisting of two PUR half-shells encased in aluminum coarse grain sheet metal and fixed with straps.

Maße in mm										
Art.-Nr.	DN	Zoll	L1	L2	D1	D2	H	H1	Gewicht (g)	Price in EURO
DWV-AL-015	15	½“	275	235	150	110	210	135	660	37,60
DWV-AL-020	20	¾“	275	235	150	110	210	135	660	39,00
DWV-AL-025	25	1“	280	240	160	120	225	145	690	40,80
DWV-AL-032	32	1 ¼“	330	280	195	145	277	180	780	46,20
DWV-AL-040	40	1 ½“	345	295	205	155	282	180	790	48,90
DWV-AL-050	50	2“	390	330	232	172	306	190	1050	54,90
DWV-AL-065	65	2 ½“	475	405	272	192	351	215	1590	68,20
DWV-AL-080	80	3“	495	415	300	210	385	235	2902	81,60
DWV-AL-100	100	4“	550	470	327	227	408	245	2810	101,00
DWV-AL-125	125	5“	615	525	360	260	485	285	3210	121,70
DWV-AL-150	150	6“	695	595	390	290	515	320	3610	140,10

Dimension D3 is adjusted depending on the valve

PS SURFACE

Tender specification PS surface - Energy Box, PS

Energy Box, PS for insulation in the range up to +130 degrees Celsius of the series DWV for three-way valves with flange connection. According to the EnEV consisting of two PUR half-shells, which are coated with PS foil and fixed with straps.

Maße in mm										
Art.-Nr.	DN	Zoll	L1	L2	D1	D2	H	H1	Gewicht (g)	Price in EURO
DWV-PS-015	15	½“	275	235	150	110	210	135	660	57,30
DWV-PS-020	20	¾“	275	235	150	110	210	135	660	58,50
DWV-PS-025	25	1“	280	240	160	120	225	145	690	62,20
DWV-PS-032	32	1 ¼“	330	280	195	145	277	180	780	70,70
DWV-PS-040	40	1 ½“	345	295	205	155	282	180	790	80,30
DWV-PS-050	50	2“	390	330	232	172	306	190	1050	94,60
DWV-PS-065	65	2 ½“	475	405	272	192	351	215	1590	112,90
DWV-PS-080	80	3“	495	415	300	210	385	235	2902	138,40
DWV-PS-100	100	4“	550	470	327	227	408	245	2810	174,70
DWV-PS-125	125	5“	615	525	360	260	485	285	3210	204,10
DWV-PS-150	150	6“	695	595	390	290	515	320	3610	216,80

Dimension D3 is adjusted depending on the valve

SERIE FKL

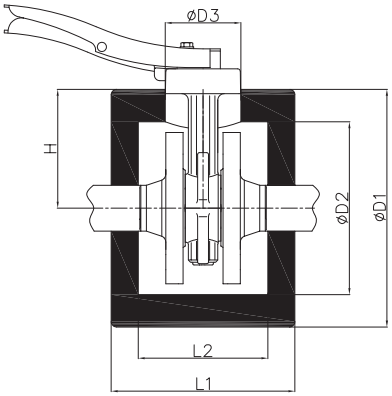

Valves	Makes / manufacturers
Shut-off flap ZESA / GESA	Ari
Shut-off flap Z011	Ebro
Butterfly valves	GEFA
DISCO check valve	Gestra
Shut-off valve BoaX-S	KSB

ALU SURFACE

Specification text Aluminum surface - Energy Box, Alu

Energy Box, aluminum for insulation in the range up to +130 degrees Celsius of the series FKL for shut-off valves, flap check valves and compensators. In accordance with the EnEV, consisting of two PUR half-shells encased in aluminum coarse grain sheet metal and fixed with clamping straps.

Maße in mm										
Art.-Nr.	DN	Zoll	L1	L2	D1	D2	D3	H	Gewicht (g)	Price in EURO
FKL-AL-015	15	½"	140	100	156	116	38	78	205	33,30
FKL-AL-020	20	¾"	140	100	156	116	38	78	205	34,50
FKL-AL-025	25	1"	140	100	163	123	38	81,5	215	37,00
FKL-AL-032	32	1 ¼"	150	100	193	143	38	96,5	410	39,70
FKL-AL-040	40	1 ½"	150	100	208	158	38	104	415	41,90
FKL-AL-050	50	2"	160	110	224	174	38	112	550	44,70
FKL-AL-065	65	2 ½"	179	119	254	194	41	127	570	49,70
FKL-AL-080	80	3"	215	135	292	212	51	146	810	60,40
FKL-AL-100	100	4"	230	140	317	227	51	158	835	71,60
FKL-AL-125	125	5"	260	160	355	225	92	177,5	940	81,90
FKL-AL-150	150	6"	260	160	395	295	92	197,5	1090	86,80

Dimension D3 is adjusted depending on the valve

PS SURFACE

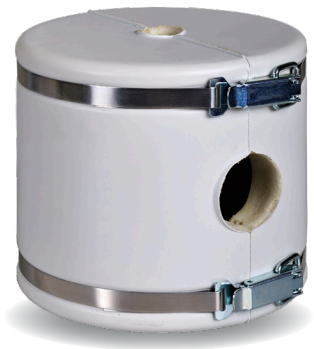

Tender specification PS surface - Energy Box, PS

Energy Box, PS for insulation in the range up to +130 degrees Celsius of the series FKL for shut-off valves, flap check valves and compensators. According to the EnEV consisting of two PUR half-shells, which are coated with PS foil and fixed with straps.

Maße in mm										
Art.-Nr.	DN	Zoll	L1	L2	D1	D2	D3	H	Gewicht (g)	Price in EURO
FKL-PS-015	15	½"	140	100	156	116	38	78	205	27,30
FKL-PS-020	20	¾"	140	100	156	116	38	78	205	27,80
FKL-PS-025	25	1"	140	100	163	123	38	81,5	215	31,30
FKL-PS-032	32	1 ¼"	150	100	193	143	38	96,5	410	35,30
FKL-PS-040	40	1 ½"	150	100	208	158	38	104	415	42,00
FKL-PS-050	50	2"	160	110	224	174	38	112	550	45,70
FKL-PS-065	65	2 ½"	179	119	254	194	41	127	570	51,40
FKL-PS-080	80	3"	215	135	292	212	51	146	810	59,70
FKL-PS-100	100	4"	230	140	317	227	51	158	835	66,10
FKL-PS-125	125	5"	260	160	355	225	92	177,5	940	79,60
FKL-PS-150	150	6"	260	160	395	295	92	197,5	1090	96,30

Dimension D3 is adjusted depending on the valve

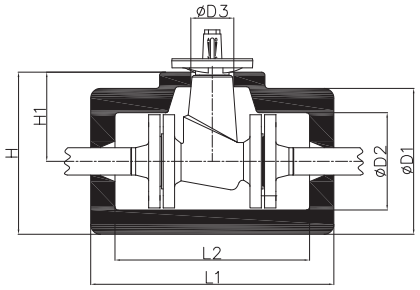

Valves	Makes / manufacturers
Shut-off valve Euro Wedi FTF 14	ARI
Wedge gate valve, FTF 14	Fromme
Shut-off valve BOA-Compact	KSB
Shut-off valve BOA-Compact IMS	KSB

ALU SURFACE

Specification text Aluminum surface - Energy Box, Alu

Energy Box, aluminum for insulation in the range up to +130 degrees Celsius of the series FVK for short ball, diaphragm, straight seat valves and flanges according to DIN length, F4. According to the EnEV, consisting of two PUR half-shells encased in aluminum coarse grain sheet metal and fixed with straps.

Maße in mm											
Art.-Nr.	DN	Zoll	L1	L2	D1	D2	D3	H	H1	Gewicht (g)	Price in EURO
FVK-AL-015	15	½"	230	190	140	100		170	100	450	35,90
FVK-AL-020	20	¾"	240	200	150	110		180	105	620	38,70
FVK-AL-025	25	1"	245	205	160	120		185	105	1010	41,10
FVK-AL-032	32	1 ¼"	260	210	195	145		220	123	1150	44,90
FVK-AL-040	40	1 ½"	280	230	205	155		248	145	1200	48,40
FVK-AL-050	50	2"	300	240	232	172		266	150	1250	53,80
FVK-AL-065	65	2 ½"	335	265	272	192		321	185	1310	66,20
FVK-AL-080	80	3"	355	275	300	210		350	200	1410	78,80
FVK-AL-100	100	4"	375	295	327	227		374	210	1490	93,20
FVK-AL-125	125	5"	405	315	359	260		435	255	1640	111,30
FVK-AL-150	150	6"	435	335	390	290		495	300	1730	122,40

Dimension D3 is adjusted depending on the valve

PS SURFACE

Tender specification PS surface - Energy Box, PS

Energy Box, PS for insulation in the range up to +130 degrees Celsius of the FVK series for short ball, diaphragm, straight seat valves and flanges according to DIN length, F4. According to the EnEV consisting of two PUR half-shells, which are coated with PS foil and fixed with straps.

Maße in mm											
Art.-Nr.	DN	Zoll	L1	L2	D1	D2	D3	H	H1	Gewicht (g)	Price in EURO
FVK-PS-015	15	½"	230	190	140	100		170	100	450	35,10
FVK-PS-020	20	¾"	240	200	150	110		180	105	620	35,30
FVK-PS-025	25	1"	245	205	160	120		185	105	1010	37,10
FVK-PS-032	32	1 ¼"	260	210	195	145		220	123	1150	42,40
FVK-PS-040	40	1 ½"	280	230	205	155		248	145	1200	48,00
FVK-PS-050	50	2"	300	240	232	172		266	150	1250	53,80
FVK-PS-065	65	2 ½"	335	265	272	192		321	185	1310	62,00
FVK-PS-080	80	3"	355	275	300	210		350	200	1410	73,50
FVK-PS-100	100	4"	375	295	327	227		374	210	1490	85,00
FVK-PS-125	125	5"	405	315	359	260		435	255	1640	96,50
FVK-PS-150	150	6"	435	335	390	290		495	300	1730	109,90

Dimension D3 is adjusted depending on the valve

SERIE FVL

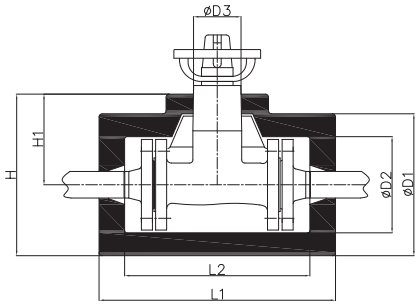

Valves	Makes / manufacturers
Shut-off valve Euro Wedi, FABA-Plus, Astra in length FTF 1	ARI
Flow Valve, FTF 1	FROMME
Shut-off valve GAV	Gestra
Line regulating and shut-off valve Kombi-F	Honeywell
Shut-off valve Boa-H, Boa-W, Sisto	KSB

ALU SURFACE

Specification text Aluminum surface - Energy Box, Alu

Energy Box, aluminum for insulation in the range up to +130 degrees Celsius of the series FVL for long ball, diaphragm, straight seat valves and flanges according to DIN length, F1. According to the EnEV, consisting of two PUR half-shells encased in aluminum coarse grain sheet metal and fixed with straps.

Maße in mm											
Art.-Nr.	DN	Zoll	L1	L2	D1	D2	D3	H	H1	Gewicht (g)	Price in EURO
FVL-AL-015	15	½"	245	205	140	100	38	170	100	470	35,00
FVL-AL-020	20	¾"	275	235	150	110	38	180	105	640	37,80
FVL-AL-025	25	1"	280	240	160	120	38	185	105	1040	39,30
FVL-AL-032	32	1 ¼"	330	280	195	145	38	220	123	1170	44,80
FVL-AL-040	40	1 ½"	345	295	205	155	38	240	138	1270	47,30
FVL-AL-050	50	2"	390	330	232	172	38	261	145	1290	52,70
FVL-AL-065	65	2 ½"	475	405	272	192	38	306	170	1370	64,50
FVL-AL-080	80	3"	495	415	300	210	43	350	200	1510	77,00
FVL-AL-100	100	4"	550	470	327	227	43	374	210	1690	94,40
FVL-AL-125	125	5"	675	525	359	260	43	435	255	1730	110,90
FVL-AL-150	150	6"	695	595	390	290	51	495	300	1805	127,20

Dimension D3 is adjusted depending on the valve

PS SURFACE

Tender specification PS surface - Energy Box, PS

Energy Box, PS for insulation in the range up to +130 degrees Celsius of the series FVL for long ball, diaphragm, straight seat valves and flanges according to DIN length, F1. According to the EnEV consisting of two PUR half-shells, which are coated with PS foil and fixed with straps.

Maße in mm											
Art.-Nr.	DN	Zoll	L1	L2	D1	D2	D3	H	H1	Gewicht (g)	Price in EURO
FVL-PS-015	15	½"	245	205	140	100	38	170	100	470	37,70
FVL-PS-020	20	¾"	275	235	150	110	38	180	105	640	38,70
FVL-PS-025	25	1"	280	240	160	120	38	185	105	1040	41,70
FVL-PS-032	32	1 ¼"	330	280	195	145	38	220	123	1170	48,20
FVL-PS-040	40	1 ½"	345	295	205	155	38	240	138	1270	54,90
FVL-PS-050	50	2"	390	330	232	172	38	261	145	1290	65,70
FVL-PS-065	65	2 ½"	475	405	272	192	38	306	170	1370	79,90
FVL-PS-080	80	3"	495	415	300	210	43	350	200	1510	98,10
FVL-PS-100	100	4"	550	470	327	227	43	374	210	1690	125,60
FVL-PS-125	125	5"	675	525	359	260	43	435	255	1730	141,60
FVL-PS-150	150	6"	695	595	390	290	51	495	300	1805	170,70

Dimension D3 is adjusted depending on the valve

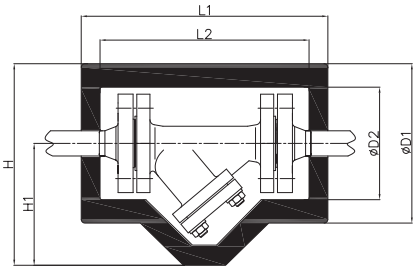

Valves	Makes / manufacturers
Strainer with flange connection	ARI
Strainer with flange connection	Danfoss
Strainer FTF1	Fromme
Angle seat valve with flange connection	Kemper
Strainer BOA-S	KSB
Check valve BOA-R	KSB

Specification text Aluminum surface - Energy Box, Alu

Energy Box, aluminum for insulation in the range up to +130 degrees Celsius of the SVF series for dirt collectors, angle seat and free-flow valves with flange connection. In accordance with the EnEV, consisting of two PUR half-shells encased in aluminum coarse grain sheet metal and fixed with straps.

ALU SURFACE

Maße in mm										
Art.-Nr.	DN	Zoll	L1	L2	D1	D2	H	H1	Gewicht (g)	Price in EURO
SVF-AL-015	15	½"	245	205	140	100	170	100	470	35,00
SVF-AL-020	20	¾"	275	235	150	110	180	105	640	37,80
SVF-AL-025	25	1"	280	240	160	120	185	105	1040	39,30
SVF-AL-032	32	1 ¼"	330	280	195	145	220	123	1170	44,80
SVF-AL-040	40	1 ½"	345	295	205	155	248	145	1270	47,30
SVF-AL-050	50	2"	390	330	232	172	266	150	1290	52,70
SVF-AL-065	65	2 ½"	475	405	272	192	321	185	1370	64,50
SVF-AL-080	80	3"	495	415	300	210	350	200	1510	77,00
SVF-AL-100	100	4"	550	470	327	227	374	210	1690	94,40
SVF-AL-125	125	5"	615	525	359	260	435	255	1730	110,90
SVF-AL-150	150	6"	695	595	390	290	495	300	1805	127,20

Dimension D3 is adjusted depending on the valve

Tender specification PS surface - Energy Box, PS

Energy Box, PS for insulation in the range up to +130 degrees Celsius of the series SVF for dirt collectors, angle seat and free-flow valves with flange connection. According to the EnEV consisting of two PUR half-shells, which are coated with PS foil and fixed with straps.

PS SURFACE

Maße in mm										
Art.-Nr.	DN	Zoll	L1	L2	D1	D2	H	H1	Gewicht (g)	Price in EURO
SVF-PS-015	15	½"	245	205	140	100	170	100	470	37,70
SVF-PS-020	20	¾"	275	235	150	110	180	105	640	38,70
SVF-PS-025	25	1"	280	240	160	120	185	105	1040	41,70
SVF-PS-032	32	1 ¼"	330	280	195	145	220	123	1170	48,20
SVF-PS-040	40	1 ½"	345	295	205	155	248	145	1270	54,90
SVF-PS-050	50	2"	390	330	232	172	266	150	1290	65,70
SVF-PS-065	65	2 ½"	475	405	272	192	321	185	1370	79,90
SVF-PS-080	80	3"	495	415	300	210	350	200	1510	98,10
SVF-PS-100	100	4"	550	470	327	227	374	210	1690	125,60
SVF-PS-125	125	5"	615	525	359	260	435	255	1730	141,60
SVF-PS-150	150	6"	695	595	390	290	495	300	1805	170,70

Dimension D3 is adjusted depending on the valve

PRICE LIST ENERGY BOX, ALU
Please indicate with each order an exact fitting type.

	Muffe										Flange						
Typ	KHM	PKH	GVM	SVK	SVM	SFM	OMG	HCM	HSG	DWM	FPA	FKL	BSC	FVK	FVL	SVF	DWV
Größe	"für Kugelhähne mit Muffenanschluss und kurzer Spindel"	"für Pumpenkugelhähne"	"für Schieber, Geradsitzventil und Rückschlagkappen mit Muffenanschluss"	"für Schrägsitzventil MNG-Kombi II und III"	"für Ventile mit schrägsitzender Spindel und Rückschlagventile mit Muffenanschluss"	"für Schmutzfänger in Muffenausführung"	"für Oventrop Hydrocontrol Oventrop "Aquastrom" KFR und MNG ALWA KFR"	"für TA Stranguliertventile STS, STAD, STAM, STAP"	"für Heimeier Vario & Kemper MultiTherm"	"für 3-Wege-Ventile mit Muffenanschluss"	"für Flanschenpaare und Blindflansche"	"für Absperrklappen, Klappenrückschlagventile und Kompensatoren"	"für KSB-Boa Super Compact"	"für kurze Kugel-, Membran-, Geradsitz- und Flanschenventile nach DIN-Baulänge F4"	"für lange Kugel-, Membran-, Geradsitz- und Flanschenventile nach DIN-Baulänge F1"	"für Schmutzfänger, Schrägsitz- und Freistromventile mit Flanschenanschluss"	"für Dreiwegeventil mit Flanschenanschluss"
DN 10	KHM-AL-010 16,60		GVM-AL-010 20,70	SVK-AL-010 20,70	SVM-AL-010 20,70	SFM-AL-010 21,30	OMG-AL-010 22,10	HCM-AL-010 22,10	HSG-AL-010 23,70	DWM-AL-010 23,70							
DN 15	KHM-AL-015 17,90		GVM-AL-015 21,30	SVK-AL-015 21,30	SVM-AL-015 21,30	SFM-AL-015 21,60	OMG-AL-015 22,80	HCM-AL-015 22,80	HSG-AL-015 23,90	DWM-AL-015 23,90	FPA-AL-015 32,90	FKL-AL-015 33,30	BSC-AL-015 33,70	FVK-AL-015 35,90	FVL-AL-015 35,00	SVF-AL-015 35,00	DWV-AL-015 37,60
DN 20	KHM-AL-020 18,60	PKH-AL-025 18,60	GVM-AL-020 21,60	SVK-AL-020 21,60	SVM-AL-020 21,60	SFM-AL-020 22,10	OMG-AL-020 23,20	HCM-AL-020 23,20	HSG-AL-020 24,20	DWM-AL-020 24,20	FPA-AL-020 33,00	FKL-AL-020 34,50	BSC-AL-020 35,90	FVK-AL-020 38,70	FVL-AL-020 37,80	SVF-AL-020 37,80	DWV-AL-020 39,00
DN 25	KHM-AL-025 20,30	PKH-AL-031 20,30	GVM-AL-025 24,60	SVK-AL-025 24,60	SVM-AL-025 24,60	SFM-AL-025 25,30	OMG-AL-025 26,40	HCM-AL-025 26,40	HSG-AL-025 26,90	DWM-AL-025 26,90	FPA-AL-025 33,50	FKL-AL-025 37,00	BSC-AL-025 37,20	FVK-AL-025 41,10	FVL-AL-025 39,30	SVF-AL-025 39,30	DWV-AL-025 40,80
DN 32	KHM-AL-032 24,50	PKH-AL-032 24,50	GVM-AL-032 26,90	SVK-AL-032 26,90	SVM-AL-032 26,90	SFM-AL-032 27,20	OMG-AL-032 28,70	HCM-AL-032 28,70	HSG-AL-032 29,30	DWM-AL-032 29,30	FPA-AL-032 34,50	FKL-AL-032 39,70	BSC-AL-032 40,00	FVK-AL-032 44,90	FVL-AL-032 44,80	SVF-AL-032 44,80	DWV-AL-032 46,20
DN 40	KHM-AL-040 28,70		GVM-AL-040 29,20	SVK-AL-040 29,20	SVM-AL-040 29,20	SFM-AL-040 29,40	OMG-AL-040 31,40	HCM-AL-040 31,40	HSG-AL-040 30,80	DWM-AL-040 30,80	FPA-AL-040 37,60	FKL-AL-040 41,90	BSC-AL-040 42,10	FVK-AL-040 48,40	FVL-AL-040 47,30	SVF-AL-040 47,30	DWV-AL-040 48,90
DN 50	KHM-AL-050 32,60		GVM-AL-050 33,30	SVK-AL-050 33,30	SVM-AL-050 33,30	SFM-AL-050 34,80	OMG-AL-050 35,40	HCM-AL-050 35,40	HSG-AL-050 35,40	DWM-AL-050 35,40	FPA-AL-050 39,40	FKL-AL-050 44,70	BSC-AL-050 45,00	FVK-AL-050 53,80	FVL-AL-050 52,70	SVF-AL-050 52,70	DWV-AL-050 54,90
DN 65	KHM-AL-065 38,00		GVM-AL-065 39,60	SVK-AL-065 39,60	SVM-AL-065 39,60	SFM-AL-065 40,50	OMG-AL-065 42,90	HCM-AL-065 42,90	HSG-AL-065 42,90		FPA-AL-065 50,20	FKL-AL-065 49,70	BSC-AL-065 50,80	FVK-AL-065 66,20	FVL-AL-065 64,50	SVF-AL-065 64,50	DWV-AL-065 68,20
DN 80											FPA-AL-080 57,40	FKL-AL-080 60,40	BSC-AL-080 61,40	FVK-AL-080 78,80	FVL-AL-080 77,00	SVF-AL-080 77,00	DWV-AL-080 81,60
DN 100											FPA-AL-100 63,20	FKL-AL-100 71,60	BSC-AL-100 73,60	FVK-AL-100 93,20	FVL-AL-100 94,40	SVF-AL-100 94,40	DWV-AL-100 101,00
DN 125											FPA-AL-125 71,30	FKL-AL-125 81,90	BSC-AL-125 87,00	FVK-AL-125 111,30	FVL-AL-125 110,90	SVF-AL-125 110,90	DWV-AL-125 121,70
DN 150											FPA-AL-150 80,00	FKL-AL-150 86,80	BSC-AL-150 94,60	FVK-AL-150 122,40	FVL-AL-150 127,20	SVF-AL-150 127,20	DWV-AL-150 140,10

Price in EURO

PRICE LIST Energy Box, PS
Please indicate with each order an exact fitting type.

	Muffe												Flange						
Typ	KHM	PKH	GVM	SVK	SVM	SFM	OMG	HCM	HSG	DWM	USV	UKM	FPA	FKL	BSC	FVK	FVL	SVF	DWV
Größe	"für Kugelhähne mit Muffenanschluss und kurzer Spindel"	"für Pumpenkugelhähne"	"für Schieber, Geradsitzventil und Rückschlagkappen mit Muffenanschluss"	"für Schrägsitzventil MNG - Kombi II und III"	"für Ventile mit schrägsitzender Spindel und Rückschlagventile mit Muffenanschluss"	"für Schmutzfänger in Muffenausführung"	"für Oventrop Hydrocontrol Oventrop "Aquastrom" KFR und MNG ALWA KFR"	"für TA Strangulierventile STS, STAD, STAM, STAP"	"für Heimeier Vario & Kemper MultiTherm"	"für 3-Wege-Ventile mit Muffenanschluss"	alle gängigen Schrägsitzventile	alle gänigen Kugelhähne mit Muffenanschluß	"für Flanschenpaare und Blindflansche"	"für Absperrklappen, Klappenrückschlagventile und Kompensatoren"	"für KSB-Boa Super Compact"	"für kurze Kugel-, Membran-, Geradsitz- und Flanschenventile nach DIN-Baulänge F4"	"für lange Kugel-, Membran-, Geradsitz- und Flanschenventile nach DIN-Baulänge F1"	"für Schmutzfänger, Schrägsitz- und Freistromventile mit Flanschenanschluss"	"für Dreiwegeventil mit Flanschenanschluss"
DN 10	KHM-PS-010 11,60		GVM-PS-010 16,40	SVK-PS-010 16,40	SVM-PS-010 16,40	SFM-PS-010 16,40	OMG-PS-010 18,30	HCM-PS-010 18,30	HSG-PS-010 19,20	DWM-PS-010 19,20	USV-PS-010 18,30	UKM-PS-010 16,40							
DN 15	KHM-PS-015 11,90		GVM-PS-015 16,70	SVK-PS-015 16,70	SVM-PS-015 16,70	SFM-PS-015 16,70	OMG-PS-015 19,00	HCM-PS-015 19,00	HSG-PS-015 19,20	DWM-PS-015 19,20	USV-PS-015 19,00	UKM-PS-015 16,70	FPA-PS-015 26,80	FKL-PS-015 27,30	BSC-PS-015 35,30	FVK-PS-015 35,10	FVL-PS-015 37,70	SVF-PS-015 37,70	DWV-PS-015 57,30
DN 20	KHM-PS-020 12,50	PKH-PS-025 12,50	GVM-PS-020 17,50	SVK-PS-020 17,50	SVM-PS-020 17,50	SFM-PS-020 17,50	OMG-PS-020 19,00	HCM-PS-020 19,00	HSG-PS-020 19,20	DWM-PS-020 19,20	USV-PS-020 19,00	UKM-PS-020 17,50	FPA-PS-020 26,90	FKL-PS-020 27,80	BSC-PS-020 36,70	FVK-PS-020 35,30	FVL-PS-020 38,70	SVF-PS-020 38,70	DWV-PS-020 58,50
DN 25	KHM-PS-025 14,10	PKH-PS-031 14,10	GVM-PS-025 19,80	SVK-PS-025 19,80	SVM-PS-025 19,80	SFM-PS-025 19,80	OMG-PS-025 21,80	HCM-PS-025 21,80	HSG-PS-025 21,90	DWM-PS-025 21,90	USV-PS-025 21,80	UKM-PS-025 19,80	FPA-PS-025 27,30	FKL-PS-025 31,30	BSC-PS-025 37,70	FVK-PS-025 37,10	FVL-PS-025 41,70	SVF-PS-025 41,70	DWV-PS-025 62,20
DN 32	KHM-PS-032 17,00	PKH-PS-032 16,90	GVM-PS-032 21,60	SVK-PS-032 21,60	SVM-PS-032 21,60	SFM-PS-032 21,60	OMG-PS-032 23,30	HCM-PS-032 23,30	HSG-PS-032 23,70	DWM-PS-032 23,70	USV-PS-032 23,30	UKM-PS-032 21,60	FPA-PS-032 28,50	FKL-PS-032 35,30	BSC-PS-032 44,60	FVK-PS-032 42,40	FVL-PS-032 48,20	SVF-PS-032 48,20	DWV-PS-032 70,70
DN 40	KHM-PS-040 20,40		GVM-PS-040 24,30	SVK-PS-040 24,30	SVM-PS-040 24,30	SFM-PS-040 24,30	OMG-PS-040 25,30	HCM-PS-040 25,30	HSG-PS-040 26,70	DWM-PS-040 26,70	USV-PS-040 25,30	UKM-PS-040 24,30	FPA-PS-040 31,30	FKL-PS-040 42,00	BSC-PS-040 49,00	FVK-PS-040 48,00	FVL-PS-040 54,90	SVF-PS-040 54,90	DWV-PS-040 80,30
DN 50	KHM-PS-050 24,50		GVM-PS-050 27,30	SVK-PS-050 27,30	SVM-PS-050 27,30	SFM-PS-050 27,30	OMG-PS-050 27,80	HCM-PS-050 27,80	HSG-PS-050 29,70	DWM-PS-050 29,70	USV-PS-050 27,80	UKM-PS-050 27,30	FPA-PS-050 34,20	FKL-PS-050 45,70	BSC-PS-050 54,70	FVK-PS-050 53,80	FVL-PS-050 65,70	SVF-PS-050 65,70	DWV-PS-050 94,60
DN 65	KHM-PS-065 29,10		GVM-PS-065 33,30	SVK-PS-065 33,30	SVM-PS-065 33,30	SFM-PS-065 33,30	OMG-PS-065 36,90	HCM-PS-065 36,90					FPA-PS-065 42,30	FKL-PS-065 51,40	BSC-PS-065 64,20	FVK-PS-065 62,00	FVL-PS-065 79,90	SVF-PS-065 79,90	DWV-PS-065 112,90
DN 80													FPA-PS-080 48,40	FKL-PS-080 59,70	BSC-PS-080 74,70	FVK-PS-080 73,50	FVL-PS-080 98,10	SVF-PS-080 98,10	DWV-PS-080 138,40
DN 100													FPA-PS-100 53,50	FKL-PS-100 66,10	BSC-PS-100 85,40	FVK-PS-100 85,00	FVL-PS-100 125,60	SVF-PS-100 125,60	DWV-PS-100 174,70
DN 125													FPA-PS-125 60,00	FKL-PS-125 79,60	BSC-PS-125 97,00	FVK-PS-125 96,50	FVL-PS-125 141,50	SVF-PS-125 141,50	DWV-PS-125 204,10
DN 150													FPA-PS-150 67,50	FKL-PS-150 96,30	BSC-PS-150 106,20	FVK-PS-150 109,80	FVL-PS-150 170,70	SVF-PS-150 170,00	DWV-PS-150 216,80

Price in EURO

SERIES TOPO VALVE CAPS

The EnEV-compliant insulation consisting of two molded foam PUR half shells with PS sheath, which are fixed with guide elements (tongue and groove system) and straps. The surface of Topo Dämkap-pen is diffusion-tight. It can therefore also be used for cold water. At media temperatures below 12 ° C, all joints and joints must be protected against the formation of condensation by being carefully taped with aluminum adhesive tape; eventually it may additionally be sealed with silicone.

PUR-foam
Lambda = 0,024
Fire Class B 2

Tensioning bands / tension springs made of corrosion-resistant material

INSULATION	
Material:	PUR-Hard foam
Thermal conductivity:	0,024 W/m*K
Density:	60 kg/m³ +/-5
Ambient temperature:	max +130°C
Fire class accordingly DIN 4102:	B2, normal inflammable

INSULATION SHELL	
Matrial:	Kunststof
Color:	grey (RAL 7035)
Fire class accordingly DIN 4102:	B1, hardly inflammable

SERIES DHS INSULATION CAPS FOR DISTRICT HEATING SYSTEMS

Insulation corresponding to EnEV consisting of two molded foam half-shells which are fixed with guide elements (tongue and groove system) and clamping straps. At media temperatures below 12 ° C, all joints and joints must be protected against condensation by being carefully sealed with silicone.

PUR-FOAM

Lambda = 0,024

Fire Class B 2

Tensioning bands / tension springs made of corrosion-resistant material

INSULATION	
Material:	PUR-Hard foam
Thermal conductivity:	0,024 W/m*K
Density:	60 kg/m³ +/-5
Ambient temperature:	max +130°C
Fire class accordingly DIN 4102:	B2, normal inflammable

INSULATION SHELL	
Matrial:	-
Color:	-
Fire class accordingly DIN 4102:	-B2, normal inflammable

SERIE DHS AK

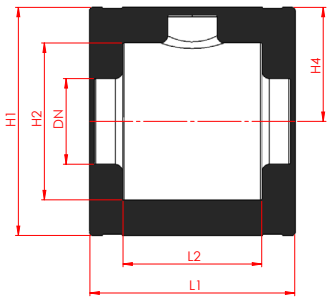

Valves	Makes / manufacturers
With flange connection For mostly butterfly valves KSB BOA SuperCompact valves	

Specification text - Energy Box DHS AK

DHS Energy Box without PS surface for insulation in the range up to +130 degrees Celsius of the DHS AK series for district heating valves. The cap consists of two polyurethane half-shells, which are mounted with galvanized clamps. In order to prevent water vapor diffusion, we recommend the use of a sealing paste in the temperature range of -8 ° C to + 12 ° C.

Size in mm

Art.-Nr.	Typ	L1	L2	H1	H2	H4	Price in EURO
1602801	DN25	170	128	158	115	78	17,19
1602802	DN32	180	140	180	142	90	19,74
1602803	DN40	185	142	195	152	97	22,56
1602804	DN50	208	167	208	165	105	27,13
1602805	DN65	220	165	250	190	125	32,63
1602806	DN80	260	180	282	204	142	40,15
1602807	DN100	290	195	325	225	162	51,50

SERIE DHS MS

Valves	Makes / manufacturers
For angle seat valves with thread and socket connection	

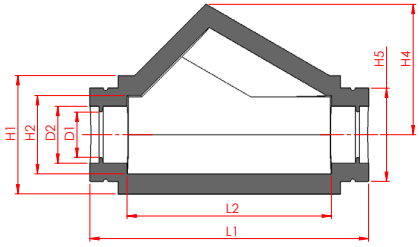

Specification text - Energy Box DHS MS

DHS Energy Box without PS surface for insulation in the range up to + 130 ° Celsius of the series DHS MS for district heating valves. The cap is used on tilted flanged, lift and punch valves as well as on mud flaps. The cap consists of two half shells made of polyurethane, which can be easily assembled with retaining rings.
To prevent water vapor diffusion, a sealing paste must be used in the temperature range -8 ° C to + 12 ° C.

Size in mm

Art.-Nr.	Typ	L1	L2	H1	H2	H4	H5	D1	D2	Price in Euro
1602701	DN25/32	210	150	83	54	92	67	34	43	9,13
1602702	DN40/50	300	220	127	84	140	100	48,5	61	11,15
1602703	DN65/80	355	258	185	121	198	148	78	90	14,91

SERIE DHS B

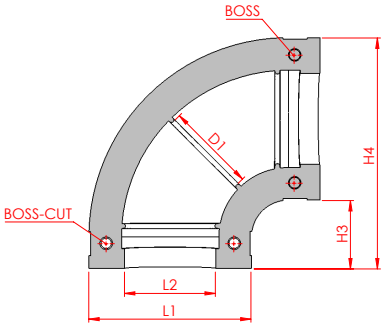

Valves	Makes / manufacturers
Pipe elbow pieces 50%	

Tender specification - Energy Box DHS B

DHS Energy Box without PS surface for insulation in the range up to +130 degrees Celsius of the series DHS B for district heating valves. The cap consists of two pipe half-shells made of polyurethane, which can be fastened with Velcro or clips. The cap can be easily removed if necessary and then fastened again.

Size in mm						
Art.-Nr.	Typ	L1	L2	H3	H4	Price in EURO
1603101	DN15/25	50	28	25	75	5,64
1603102	DN25/32	67	43	34	100	6,45
1603103	DN40/50	100	62	42	142	8,46
1603104	DN65/80	147	92	77	224	15,44
1603105	DN100	205	115	90	295	23,90
1603106	DN125	250	142	100	350	28,20

SERIE DHS R

Valves	Makes / manufacturers
Pipe pieces 50%	

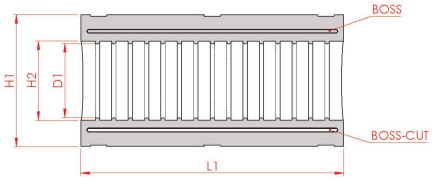

Specification text - Energy Box DHS R
Energy box without PS surface for insulation in the range up to + 130 ° Celsius of the series DHS R for district heating valves. Length 500 mm. The cap consists of two pipe half-shells made of polyurethane, which are easily sealed and assembled with stainless steel retaining rings. The cap can be easily removed if necessary and then fastened again.
To prevent water vapor diffusion, a sealing paste must be used in the temperature range -8 ° C to + 12 ° C.

Size in mm						
Art.-Nr.	Typ	L1	H1	H2	D1	Price in EURO
1603001	DN15/20	500	50	28	22	8,46
1603002	DN25/32	500	67	43	33	10,34
1603003	DN40/50	500	100	60	48	21,75
1603004	DN65/80	500	150	90	76	24,98
1603005	DN100	500	204	124	115	31,96
1603006	DN125	500	250	150	140	45,25

SERIE DHS DM

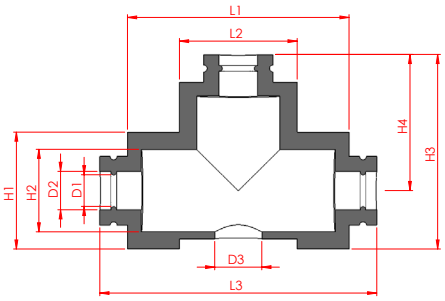

Valves	Makes / manufacturers
For three-way valves with thread and socket connection	

Tender specification - Energy Box DHS DM

Energy box without PS surface for insulation in the range up to + 130 ° Celsius of the DHS DM series for district heating valves.
The cap consists of two polyurethane half-shells, which are mounted with galvanized clamps.
In order to prevent water vapor diffusion, we recommend the use of a sealing paste in the temperature range of -8 ° C to + 12 ° C.

Size in mm

Art.-Nr.	Typ	L1	L2	L3	H1	H2	H3	H4	D1	D2	D3	Price in EURO
1603401	DN15/20	160	85	200	85	60	145	102	23	28	34,5	10,34
1603402	DN25/32	190	117	230	112	84	170	110	36	44		13,70
1603403	DN40/50	220	135	279	130	100	200	135	51	61		13,70

ENERGY BOX DHS F

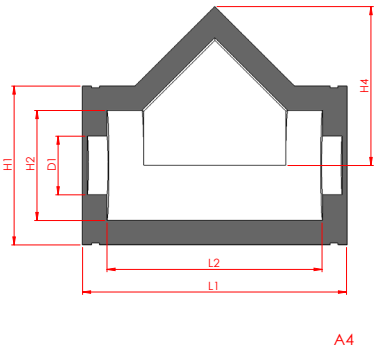

A4

Valves	Makes / manufacturers
For inclined valves with flange connection	

Tender specification - Energy Box DHS F

DHS Energy Box without PS surface for insulation in the range up to + 130 ° Celsius for district heating valves.

The cap consists of two polyurethane half-shells, which are mounted with galvanized clamps. In order to prevent water vapor diffusion, we recommend the use of a sealing paste in the temperature range of -8 ° C to + 12 ° C.

Size in mm

Art.-Nr.	Typ	L1	L2	H1	H2	H4	D1	Price in EURO
1602901	DN20	270	240	147	102	135	-	15,85
1602902	DN25	258	218	158	116	148	-	17,19
1602903	DN32	290	250	182	142	155	-	19,74
1602904	DN40	310	270	192	152	185	-	22,56
1602905	DN50	365	315	205	167	220	-	26,99
1602906	DN65	420	355	246	187	248	-	32,50
1602907	DN80	467	389	285	202	272	91	40,15
1602908	DN100	540	440	325	225	325	120	51,16
1602909	DN125	585	485	353	270	367	145	64,83

SERIE DHS FL

Valves	Makes / manufacturers
For flange connection	

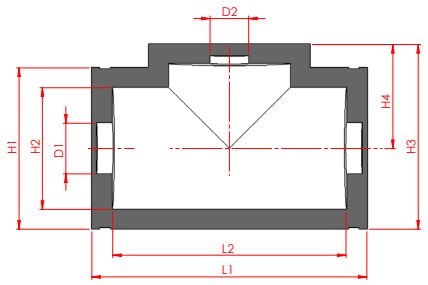

Tender specification - Energy Box DHS FL

Energy box without PS surface for insulation in the range up to + 130 ° Celsius of the series DHS FL for district heating valves.
The cap consists of two polyurethane half-shells, which are mounted with galvanized clamps.

In order to prevent water vapor diffusion, we recommend the use of a sealing paste in the temperature range of -8 ° C to + 12 ° C.

A4

Size in mm										
Art.-Nr.	Typ	L1	L2	H1	H2	H3	H4	D1	D2	Price in EURO
1603201	DN20	255	220	137	105	152	83	22	-	23,63
1603202	DN25	262	220	161	120	180	100	32	-	25,65
1603203	DN32	290	250	182	142	203	111	40	-	29,27
1603204	DN40	312	272	193	152	225	127	50	-	33,84
1603205	DN50	370	320	205	165	243	138	-	-	40,42
1603206	DN65	423	355	248	187	284	160	78	59,3	48,61
1603207	DN100	540	440	327	225	375	207	120	-	73,18

SERIE DHS KH

Valves	Makes / manufacturers
For ball valve and straight seat valves with thread and socket connection	

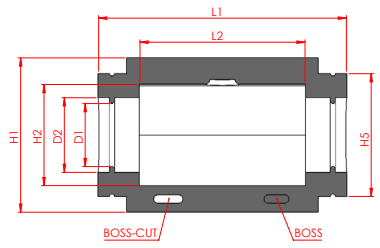

Tender text - Energy Box DHS KH

Energy Box without PS surface for insulation in the range up to + 130 ° Celsius of the series DHS KH for district heating valves.

The cap consists of two half shells with tongue and groove on the abutting surfaces that prevent slipping. They are fastened with electrogalvanized galvanized spring rings or clamps. In order to prevent water vapor diffusion, a sealing paste must be used in the temperature range -8 ° C to + 12 ° C.

Size in mm									
Art.-Nr.	Typ	L1	L2	H1	H2	H5	D1	D2	Price in EURO
1603301	DN15/20	125	68	70	44	51,5	26	30	7,12
1603302	DN25/32	156	97	85	60	65	33	43	9,13
1603303	DN40/50	218	132	124	88	100	48	60	11,15
1603304	DN65/80	300	200	188	120	147	77	90	14,91

SERIE TOPO MS

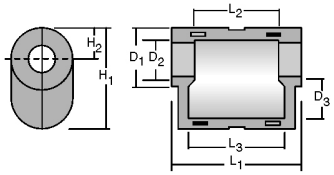

Valves	Makes / manufacturers
For all common strainers with threaded connection	

Tender specification - TOPO Type MS

TOPO MS for insulation in the range up to + 130 ° Celsius for mud flaps with sleeves.

According to the EnEV consisting of two PUR half-shells, which are coated with PS foil and fixed with straps.

Size in mm										
Art.-Nr.	Typ	L1	L2	L3	D1	D2	D3	H1	H2	Price in EURO
1501601	MS 15/20	140	95	108	70	40	48	117	35	20,13
1501602	MS 25	162	111	127	85	57	62	138	43	22,82
1501603	MS 32/40	222	155	185	117	75	95	207	62	28,19
1501604	MS 50	260	188	244	140	93	113	242	72	30,87

SERIE TOPO ME

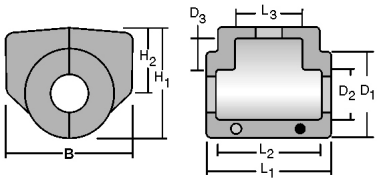

Valves	Makes / manufacturers
For diaphragm valves	

Tender specification - TOPO Type ME

TOPO ME for insulation in the range up to + 130 ° Celsius for diaphragm valves with sleeves.
According to the EnEV consisting of two PUR half-shells, which are coated with PS foil and fixed with straps.

Typ	Art.-Nr.	B	L1	L2	L3	D1	D2	D3	H1	H2	Price in EURO
1501701	ME 15/20	126	125	94	64	90	47	33	102	59	20,13
1501702	ME 25	140	136	111	75	98	59	34	123	75	22,82
1501703	ME 32	155	156	135	87	118	63	47	150	92	25,50
1501704	ME 40	172	175	149	100	145	85	55	182	110	28,19
1501705	ME 50	212	205	177	117	155	95	45	193	115	30,87

SERIE TOPO FV

Valves	Makes / manufacturers
Shut-off valve Euro Wedi, FABA-Plus, Astra in length FTF 1	ARI
Flow Valve, FTF 1	FROMME
Shut-off valve GAV	Gestra
Line regulating and shut-off valve Kombi-F	Honeywell
Shut-off valve Boa-H, Boa-W, Sisto	KSB

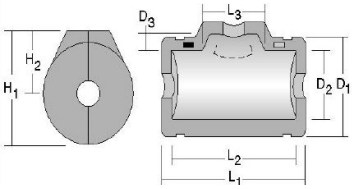

Tender specification - TOPO Type FV

TOPO FV for insulation in the range up to + 130 ° Celsius for straight seat / piston valves with flanges.
According to the EnEV consisting of two PUR half-shells, which are coated with PS foil and fixed with straps.

Size in mm										
Art.-Nr.	Typ	L1	L2	L3	D1	D2	D3	H1	H2	Price in EURO
1501003	FV 32/40	350	285	127	235	160	40	260	140	51,01
1501004	FV 50	400	315	120	255	170	30	250	130	55,03
1501005	FV 65	478	400	150	275	195	48	310	170	57,72
1501006	FV 80	490	390	190	290	210	48	337	190	60,40
1501007	FV 100	575	475	225	330	230	57	390	230	67,11
1501008	FV 125	590	500	270	355	260	80	445	245	73,83

SERIE TOPO HT

Valves	Makes / manufacturers
For diaphragm valves with flanges	

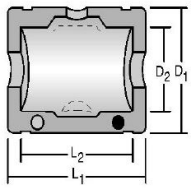

Tender specification - TOPO Type HT

TOPO HT for insulation in the range up to + 130 ° Celsius for ball valves of short overall length with flanges.
According to the EnEV consisting of two PUR half-shells, which are coated with PS foil and fixed with straps.

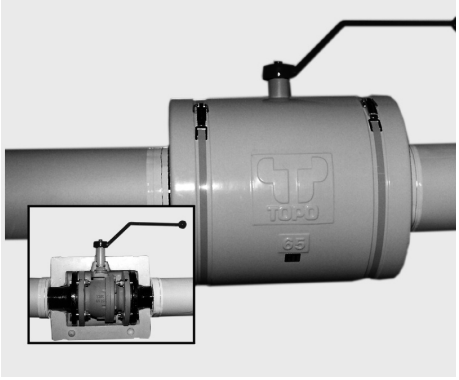

Size in mm						
Art.-Nr.	Typ	L1	L2	D1	D2	Price in EURO
1501805	HT 50	300	220	245	170	55,03
1501806	HT 65	340	235	285	187	57,72
1501807	HT 80	360	260	300	200	60,40
1501808	HT 100	370	270	320	225	67,11

SERIE TOPO FS

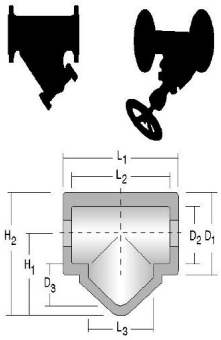

Valves	Makes / manufacturers
Strainer with flange connection	ARI
Strainer with flange connection	Danfoss
Strainer FTF1	Fromme
Angle seat valve with flange connection	Kemper
Strainer BOA-S	KSB
Check valve BOA-R	KSB

Tender specification - TOPO Type FS

TOPO FS for insulation in the range up to + 130º degrees Celsius for angle seat valves and mudguard with flanges.
According to the EnEV consisting of two PUR half-shells, which are coated with PS foil and fixed with straps.

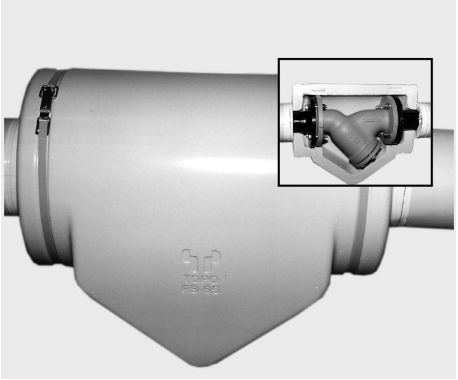

Size in mm

Art.-Nr.	Typ	L1	L2	L3	D1	D2	D3	H1	H2	Price in EURO
1501201	FS 32/40	350	285	200	235	160	110	220	335	51,01
1501202	FS 50	390	320	220	250	170	110	235	360	55,03
1501203	FS 65	470	395	250	275	195	120	260	400	57,72
1501204	FS 80	495	395	290	290	210	140	285	440	60,40
1501205	FS 100	570	470	330	330	230	175	330	500	67,11

SERIE TOPO FK

Valves	Makes / manufacturers
For diaphragm valves, ball valves, valves with grease, with flanges	

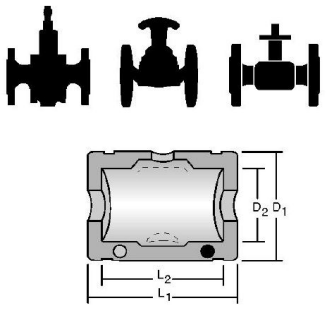

Tender specification - TOPO Type FK

TOPO FK for insulation in the range up to + 130º degrees Celsius for ball valves, diaphragm valves and relubricated taps.
According to the EnEV consisting of two PUR half-shells, which are coated with PS foil and fixed with straps.

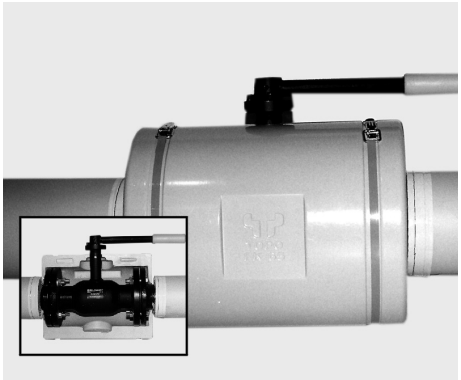

Size in mm

Art.-Nr.	Typ	L1	L2	D1	D2	Price in EURO
1501101	FK 15	212	180	148	98	30,87
1501102	FK 20/25	250	200	165	120	41,61
1501103	FK32	260	230	200	145	46,98
1501104	FK 40	290	265	230	155	51,01
1501105	FK 50	340	290	250	170	55,03
1501106	FK 65	340	290	270	190	57,72
1501106-I	FK 65-I	440	390	270	190	60,40
1501107	FK 80	400	350	290	205	60,40
1501108	FK 100	445	380	330	230	67,11
1501109	FK 125	510	480	350	258	73,83

SERIE TOPO MSC

Valves	Makes / manufacturers
All common angle seat valve with thread and socket connection	

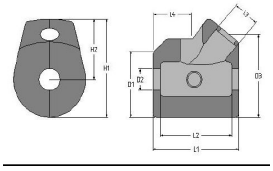

Tender specification - TOPO Type MSC
TOPO MSC for insulation in the range up to + 130º degrees Celsius for angle seat valves with sleeves.
According to the EnEV consisting of two PUR half-shells, which are coated with PS foil and fixed with straps.

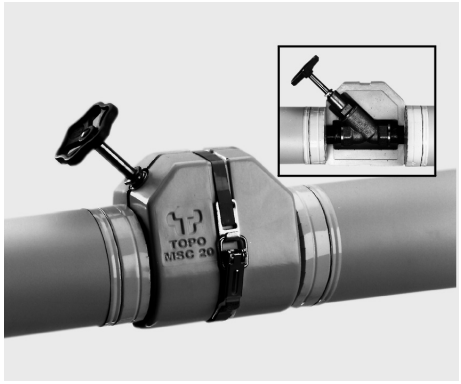

Size in mm

Art.-Nr.	Typ	L1	L2	L3	D1	D2	D3	H1	H2	Price in EURO
1502001	MSC 15	106	85	29	80	32	89	110	70	18,79
1502002	MSC 20	120	100	36	51	104	47	89	130	20,13
1502003	MSC 25	135	115	44	100	47	96	134	84	22,82
1502004	MSC 32	150	130	53	64	110	119	150	94	25,50
1502005	MSC 40	170	150	69	130	67	125	175	110	28,19
	MSC 50	200	178	72	140	77	147	195	123	30,87

SERIE TOPO MN

Valves	Makes / manufacturers
String regulating valves with thread and socket connection	

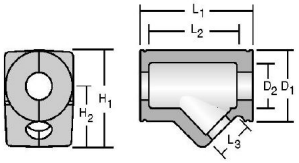

Tender specification - TOPO Type MN
TOPO MN for insulation in the range up to + 130º degrees Celsius for angle seat / flow control valves with sockets.
According to the EnEV consisting of two PUR half-shells, which are coated with PS foil and fixed with straps.

Size in mm

Art.-Nr.	Typ	L1	L2	L3	D1	D2	H1	H2	Price in EURO
1502101	MN 15	116	95	30	60	35	84	55	18,79
1502102	MN 20	125	95	40	75	43	104	70	20,13
1502103	MN 25	136	120	50	75	54	106	70	22,82
1502104	MN 32	158	134	55	95	57	136	90	25,50
1502105	MN 40	200	140	55	100	67	155	95	28,19
1502106	MN 50	220	173	65	120	88	180	105	30,87

SERIE TOPO K

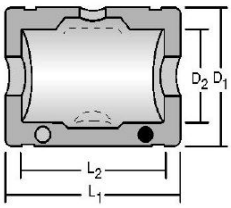

Valves	Makes / manufacturers
Ball valve with welding ends	

Tender specification - TOPO Type K

TOPO K for insulation in the range up to + 130º degrees Celsius for ball valves with sockets and welding connection.
According to the EnEV consisting of two PUR half-shells, which are coated with PS foil and fixed with straps.

Size in mm

Art.-Nr.	Typ	L1	L2	D1	D2	Price in EURO
1502401	K 25/50	200	140	145	93	22,82
1502402	K 65	230	170	200	115	36,24
1502403	K 80	230	167	220	135	41,61
1502404	K 100	315	245	245	162	46,98
1502405	K 125	320	245	270	190	73,83
1502406	K 150	440	360	308	225	80,54

SERIE TOPO M

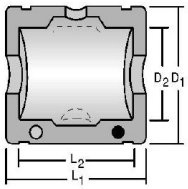

Valves	Makes / manufacturers
Piston valves with thread	ABA Beul
Straight seat valves & piston	Bender
Valves with threaded two-way control valve	Danfoss
Gate valve	Duramar
and all manufacturers to DIN length	

Tender specification - TOPO Type M

TOPO M for insulation in the range up to + 130º degrees Celsius for valves with servomotor, disc valves, check valves and check valves.
According to the EnEV consisting of two PUR half-shells, which are coated with PS foil and fixed with straps.

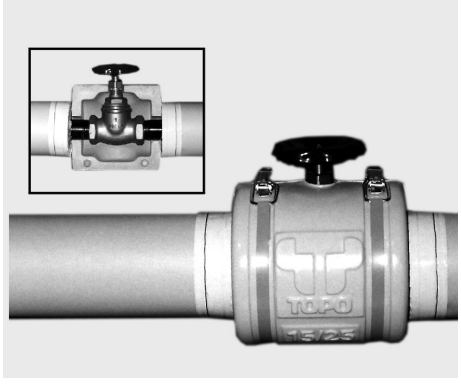

Size in mm

Art.-Nr.	Typ	L1	L2	D1	D2	Price in EURO
1502501	M 15/25	145	113	140	93	22,82
1502502	M 32	170	130	150	96	25,50
1502503	M 40	190	148	165	115	28,19
1502504	M 50	220	178	200	140	30,87

SERIE TOPO AK

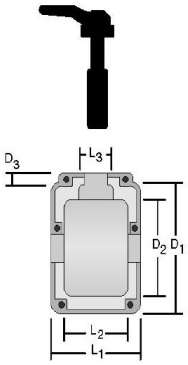

Valves	Makes / manufacturers
Shut-off flap ZESA / GESA	Ari
Shut-off flap Z011	Ebro
Butterfly valves	GEFA
DISCO check valve	Gestra
Shut-off valve BoaX-S	KSB

Tender specification - TOPO Type AK
TOPO AK for insulation in the range up to + 130º degrees Celsius for shut-off valves.
According to the EnEV consisting of two PUR half-shells, which are coated with PS foil and fixed with straps.

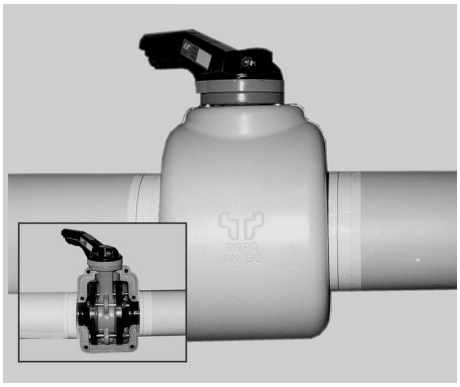

Size in mm

Art.-Nr.	Typ	L1	L2	L3	D1	D2	D3	Price in EURO
1502802	AK 32	160	113	65	203	160	18	25,50
1502803	AK 40	160	111	65	203	160	40	28,19
1502804	AK 50	160	118	65	220	174	35	30,87
1502805	AK 65	160	116	65	250	199	35	36,24
1502806	AK 80	200	133	90	270	209	40	41,61

SERIE TOPO T

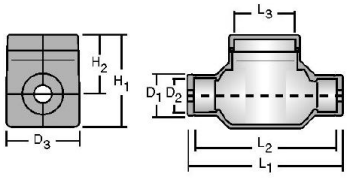

Valves	Makes / manufacturers
Caps for heat and water meters	

Tender specification - TOPO Type T
TOPO T for insulation in the range up to + 130º degrees Celsius for water and heat meters.
According to the EnEV consisting of two PUR half-shells, which are coated with PS foil and fixed with straps.

Size in mm

Art.-Nr.	Typ	L1	L2	L3	D1	D2	D3	H1	H2	Price in EURO
1502705	T 190	225	207	90	70	45	124	154	100	26,85
1502706	T 220	260	238	90	70	45	124	154	100	29,53

SERIE TOPO MV

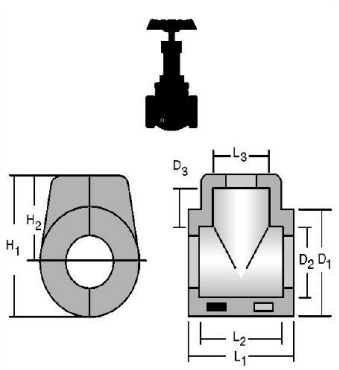

Valves	Makes / manufacturers
Piston valves with thread	ABA Beul
Straight seat valves & piston valves with thread	Bender
Two-way control valve	Danfoss
Gate valve	Duramar
and all manufacturers to DIN length	

Tender specification - TOPO Type MV

TOPO S for insulation in the range up to + 130º degrees Celsius for shut-off valves and valves with sleeves.
According to the EnEV consisting of two PUR half-shells, which are coated with PS foil and fixed with straps.

Size in mm

Art.-Nr.	Typ	L1	L2	L3	D1	D2	D3	H1	H2	Price in EURO
1501501	MV 15/20	88	69	40	76	39	28	95	54	12,08
1501502	MV 25	92	77	44	94	44	33	110	60	13,42
1501503	MV 32	110	92	56	94	56	36	120	70	14,77
1501504	MV 40	116	95	62	108	63	46	140	84	16,11
1501505	MV 50	129	109	74	122	77	55	165	98	17,45

SERIE TOPO OM

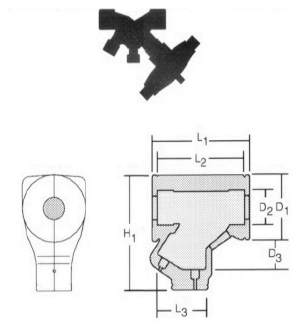

Valves	Makes / manufacturers
Line regulating valves STAD	TA Heimeier
Threaded line regulating valves	Danfoss
BOA-control valve -Control SAR	KSB

Tender specification - TOPO Type OM

TOPO OM for insulation in the range up to + 130º degrees Celsius.

According to the EnEV consisting of two PUR half-shells, which are coated with PS foil and fixed with straps.

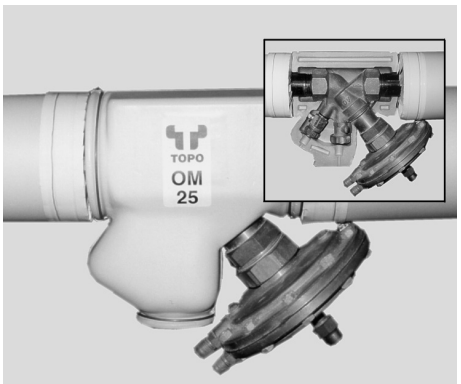

Size in mm

Art.-Nr.	Typ	L1	L2	L3	D1	D2	D3	H1	Price in Euro
1502902	OM 20	132	115	80	75	45	40	155	20,13
1502903	OM 25	155	140	80	100	53	40	175	22,82
1502904	OM 32	165	140	80	110	60	40	195	25,50
1502905	OM 40	178	150	80	128	65	40	212	28,19
1502906	OM 50	210	185	80	162	83	40	247	30,87

SERIE TOPO S

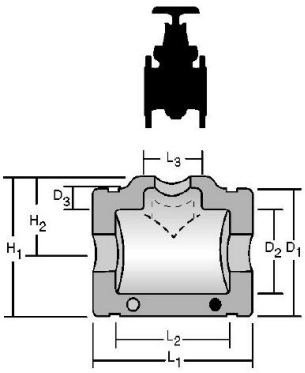

Valves	Makes / manufacturers
Shut-off valve Euro Wedi FTF 14	ARI
Wedge gate valve, FTF 14	Fromme
Shut-off valve BOA-Compact	KSB
Shut-off valve BOA-Compact IMS	KSB

Tender specification - TOPO Type S

TOPO S for insulation in the range up to + 130º degrees Celsius for gate valves of short overall length.
According to the EnEV consisting of two PUR half-shells, which are coated with PS foil and fixed with straps.

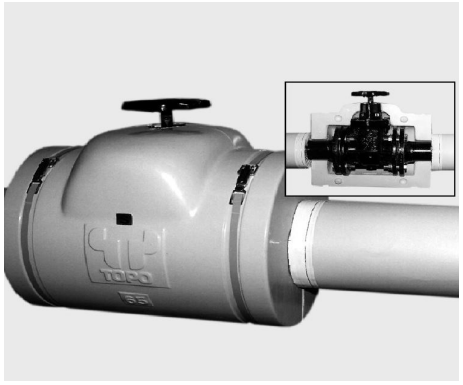

Size in mm

Art.-Nr.	Typ	L1	L2	L3	D1	D2	D3	H1	H2	Price in EURO
1501302	S 50	345	245	120	265	170	35	290	165	55,03
1501303	S 65	380	275	120	285	190	52	330	185	57,72
1501304	S 80	400	300	136	300	205	65	350	200	60,40
1501305	S 100	405	325	137	320	225	95	380	230	67,11
1501306	S 125	415	330	153	350	255	137	450	260	73,83
1501307	S 150	440	335	169	370	287	120	485	300	80,54

SERIE TOPO KS

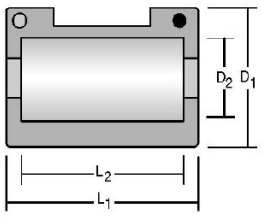

Valves	Makes / manufacturers
All common ball valves with socket connection	

Tender specification - TOPO Type KS

TOPO KS for insulation in the range up to + 130º degrees Celsius for smaller ball valves with threaded sockets.
According to the EnEV consisting of two PUR half-shells, which are coated with PS foil and fixed with straps.

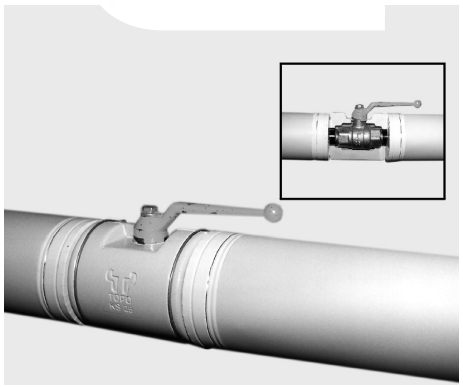

Size in mm

Art.-Nr.	Typ	L1	L2	D1	D2	Price in Euro
1501401	KS 15/20	98	83	76	46	12,08
1501402	KS 25	114	94	95	55	13,42
1501403	KS 32	126	104	105	66	14,77
1501404	KS 40	139	117	120	78	16,11
1501405	KS 50	180	152	150	100	17,45

PRICE LIST SYSTEM DHS CAPS FOR DISTRICT HEATING VALVES
Please indicate with each order an exact fitting type.

Typ	AK	MS	B	R	DM	F	FL	KH
Größe								
DN 10								
DN 15			B DN15 5,64	R DN15 8,46	DM DN15 10,34			KH DN15 7,12
DN 20			B DN20 5,64	R DN20 8,46	DM DN20 10,34	F DN20 15,85	FL DN20 23,63	KH DN20 7,12
DN 25	AK DN25 17,19	MS DN25 9,13	B DN25 6,64	R DN25 10,34	DM DN25 13,70	F DN25 17,19	FL DN25 25,65	KH DN 25 9,13
DN 32	AK DN32 19,74	MS DN32 9,13	B DN32 6,45	R DN32 10,34	DM DN32 13,70	F DN32 19,74	FL DN32 29,27	KH DN32 9,13
DN 40	AK DN40 22,56	MS DN40 11,15	B DN40 8,46	R DN40 21,75	DM DN40 13,70	F DN40 22,56	FL DN40 33,84	KH DN40 11,15
DN 50	AK DN50 27,13	MS DN50 11,15	B DN50 8,46	R DN50 21,75	DM DN50 13,70	F DN50 26,99	FL DN50 40,42	KH DN50 11,15
DN 65	AK DN65 32,63	MS DN65 14,91	B DN65 15,44	R DN65 24,98		F DN65 32,50	FL DN65 48,61	KH DN 65 14,91
DN 80	AK DN80 40,15	MS DN80 14,91	B DN80 15,44	R DN80 24,98		F DN80 40,15		KH DN80 14,91
DN 100	AK DN100 51,15		B DN100 23,90	R DN100 31,96		F DN100 51,16	FL DN100 73,18	
DN 125			B DN125 28,20	R DN125 45,25		F DN125 64,83		
DN 150								

PRICE LIST SYSTEM TOPO INSULATION CAPS

Typ	MS	ME	FV	HT	FS	FK	MSC	MN	K	M	AK	T	MV	OM	S	KS
Größe	"für ür Schmutz-fänger mit Muffen"	"für Membran-ventile mit Muffen"	"für Gerad-sitz-/kolben-ventile mit Flanschen"	"für Kugelventile von kurzer Baulänge mit Flanschen"	"für Schrägsitzven-tile und Schmutz-fänger mit Flanschen"	"für Kugelventile, Membran-ventile und nachschmier-bare Hähne"	"für Schrägsitzven-tile mit Muffen"	"für Schrägsitzven-tile mit Muffen"	"für Kugelventile mit Muffen und Schweissan-schluss"	"Für Ventile mit Stellmotor, Tellerventile, Rückschlag-ventile und Rückschlag-klappen"	"Für Absperr-ventile"	"Für Wasser-und Absperr-ventile"	"Für Absper-rventile und -Schieber mit Muffen"		"für Absper-rschieber von kurzer Baulänge"	"für kleinere Kugelventile mit Gewinde-muffen"
DN 10																
DN 15	MS-015 20,13	ME-015 20,13				FK-015 30,87	MSC-015 18,79	MN-015 18,79		M-015 22,82			MV-015 12,08			KS-015 12,08
DN 20	MS-020 20,13	ME-020 20,13				FK-020 41,61	MSC-020 20,13	MN-020 20,13		M-020 22,82			MV-020 12,08	OM-020 20,13		KS-020 12,08
DN 25	MS-025 22,82	ME-025 22,82				FK-025 41,61	MSC-025 22,82	MN-025 22,82	K-025 22,82	M-025 22,82			MV-025 13,42	OM-025 22,82		KS-025 13,42
DN 32	MS-032 28,19	ME-032 25,50	FV-032 51,01		FS-032 51,01	FK-032 46,98	MSC-032 25,50	MN-032 25,50	K-032 22,82	M-032 25,50	AK-032 25,50		MV-032 14,77	OM-032 25,50		KS-032 14,77
DN 40	MS-040 28,19	ME-040 28,19	FV-040 51,01		FS-040 51,01	FK-040 51,01	MSC-040 28,19	MN-040 30,87	K-040 22,82	M-040 28,19	AK-040 28,19		MV-040 16,11	OM-040 28,19		KS-040 16,11
DN 50	MS-050 30,87	ME-050 30,87	FV-050 55,03	HT-050 55,03	FS-050 55,03	FK-050 55,03	MSC-050 30,87	MN-050 30,87	K-050 22,82	M-050 30,87	AK-050 30,87		MV-050 17,45	OM-050 30,87	S-050 55,03	KS-050 17,45
DN 65			FV-065 57,72	HT-065 57,72	FS-065 57,72	FK-065 57,72			K-065 36,24		AK-065 36,24				S-065 57,72	
DN 80			FV-080 60,40	HT-80 60,40	FS-080 60,40	FK-080 60,40			K-080 41,61		AK-080 41,61				S-080 60,40	
DN 100			FV-100 67,11	HT-100 67,11	FS-100 67,11	FK-100 67,11			K-100 46,98						S-100 67,11	
DN 125			FV-125 73,83			FK-125 73,83			K-125 73,83						S-125 73,83	
DN 150									K-150 80,54						S-150 80,54	
T190												T190 26,85				
T220												T220 29,53				

TiNBY

CONTACT PERSON

Torben Nielsen
Managing Director

E-mail: tn@tinby.dk Tel.:
04608 9029 7425 Fax:
04608 9029 17434

TECHNICAL SUPPORT

Michael V. Therkelsen
Head of Sales & Product Development

E-mail: mvt@tinby.dk Tel.:
+45 51182639
Fax: 04608 9029 17434

Weronika Hemer
Order Handler

E-mail: bestellung@tinby.pl
Tel.: 04608 9029 7433
Fax: 04608 9029 17434

Lars Skjærris
Sales Manager

E-mail: lsk@tinby.de
Tel.: 04608 9029 7435
Fax: 04608 9029 17434

Tinby Sp. z o. o. · Ul. Zeromskiego 14 · PL-98220 Zdunska Wola

Tel. 04608 9029 7433 (Au tragsannahme)
Fax 04608 9029 17434 (Au tragsannahme)

E-mail: tinby@tinby.de

CVR No. PL 7781372377
www.tinby.de

Ordering

E-mail: bestellung@tinby.pl
Tfl. 04608 9029 7433
Fax: 04608 9029 17434

TERMS OF SALE AND DELIVERY

1. Scope

a) These terms of sale and delivery apply to all of us who, Tinby Sp. Z. o.o, Ul. Zeromskiego 14, PL-98-220 Zdunska Wola, Poland
and you as our customer, unless they are changed by a written agreement.
Only written agreements are binding on Tinby Sp. Z. o.o.
These terms of sale and delivery apply only to merchants.
b) All agreements made between you and us in connection with the purchase agreement arise in particular from these conditions of sale and delivery, our written order confirmation and our declaration of acceptance. In addition, the Incoterms 2010 EXW (Ex Works) apply to this contract.
c) Decisive is the version of these conditions of sale and delivery valid at the time the contract is concluded.
d) We do not accept deviating conditions of the customer. This also applies if we do not expressly object to the inclusion of the conditions of the customer.

2.Drawings and descriptions
All measurements and weights, drawings, sketches, instructions for use, cost estimates, including technical, chemical and other data contained in catalogs, brochures, newsletters and advertisements, images and price lists are approximate.
Such statements are binding only to the extent that they are expressly referred to.
3.Prices and shipping costs
The offer is made according to the daily price. Tinby Sp. Z. o.o is entitled to change prices without prior notice.If there is an overspend, this is for example in the prices for sub-suppliers, commodity prices, value rates, contractual wages, public charges, etc.
All prices are exclusive of VAT. or other expenses and freight charges, unless otherwise communicated in writing.
All offers are submitted in accordance with the standard conditions of Tinby Sp. Z. o.o.
4.Zahlungsbedingungen
Payment is in EUR, unless otherwise agreed in writing.
If payment is not made by the due date, interest will be charged per month commenced at 1% of the amount owed.
The customer is only entitled to set-off rights if his counterclaims have been legally established, are undisputed or acknowledged by us. Furthermore, the exercise of a right of retention is authorized to the extent that its counterclaim is based on the same contractual relationship.
5.Lieferung
The goods are delivered in accordance with 2010 EXW (Ex Works).

6. Reservation
The delivered goods remain the property of Tinby Sp. Z. o.o. until full payment of the purchase price.
7. Warranty for defects

a) The warranty rights of the customer presuppose that he has duly fulfilled his duties of inspection and complaint pursuant to § 377 HGB.
b) If there is a defect for which Tinby Sp. Z. o.o is responsible, we shall be entitled, at our discretion, to remedy the defect in the form of a defect removal or a replacement delivery. In the case of removal of defects, Tinby Sp. Z oo is obliged to bear all expenses necessary for the purpose of remedying the defect, in particular transport, travel, labor and material costs, unless these are increased by the fact that the purchase item is after another Place was spent as the place of performance.
c) If the supplementary performance fails, the customer is entitled at his discretion to declare the withdrawal or to demand a corresponding reduction of the purchase price (reduction).
d) Unless otherwise stated below (subsections e and f), further claims of the customer, regardless of the legal grounds, are excluded. We are therefore not liable for damages that did not occur on the delivery item itself; In particular, we are not liable for lost profits or other financial losses of the customer.
e) If the cause of the damage is based on intent or gross negligence, we are liable in accordance with the statutory provisions. This also applies if the customer requires damages instead of performance due to the lack of a guarantee of our condition.
f) If we culpably violate an essential contractual obligation, the liability is limited to the damage typical for the contract. In addition, it is excluded according to paragraph d). From one The "essential" contractual obligation in the sense of these GTC is always to be said, if we culpably violate such obligations, on the proper fulfillment of which the customer trusts and may also trust, because they shape the contract.
g) The warranty period is 12 months, calculated after the transfer of risk.

8. Return of goods
If the customer does not use the ordered goods as intended, he can return them for a fee of 30% of the order value. This is possible within a period of two years from delivery of the goods. The freight costs are borne by the customer.
The goods must be complete and free from defects, stains and dirt.
9. Total Liability

a) Further liability for damages other than those provided for in section 6 (d) to f) is excluded, regardless of the legal nature of the claim asserted.
b) This regulation according to paragraph a) does not apply to claims according to

§§ 1.4 Product Liability Act. It also does not apply if Tinby Sp. Z. o.o is liable for a physical injury or damage to health for other legal reasons.
c) If not for the limitation of liability according to number 6 f)

Claims under producer liability pursuant to § 823 BGB for damage to property, the liability of Tinby Sp. Z. o.o is limited to the compensation of the insurance. Insofar as this does not occur or does not occur completely, Tinby Sp. Z. o.o shall be liable even up to the amount of the coverage.

d) The provision according to paragraph a) does not apply in case of initial inability or impossibility.
e) Insofar as our liability is excluded or limited, this also applies to the personal liability of our employees, employees, employees, representatives and vicarious agents.

10. Force majeure

The following circumstances exonerate Tinby Sp. Z. o.o from liability, provided the circumstances occur after conclusion of the contract; These circumstances also release Tinby Sp. Z. o.o from the obligation to fulfill the contract:
Strikes, lockouts, business interruptions, delayed deliveries by suppliers and similar cases that extend the time of delivery.

War, civil unrest, natural disasters and similar events beyond the control of the parties, including lack of raw materials, confiscation, currency restrictions or regulatory intervention, give Tinby Sp. Z o the right to make any offer or standing order in whole or in part repealed.
The party claiming force majeure is obliged to inform the other party by express letter / fax / e-mail within 14 days of the occurrence of force majeure.

11. Applicable law; jurisdiction

All disputes between the parties must be settled in accordance with German law. The German jurisdiction is responsible for disputes.

TINBY A / S
- SUBSIDIARIES OF SP GROUP

Member of SP Group A/S

Tinby A / S was founded in 1972 and is today Scandinavia's leading supplier of polyurethane solutions. Our blanks made of flexible, solid or foamed polyurethane are used, for example, in furniture, instruments, window insulation or wind turbines. As a complete supplier, we develop highly specialized plastics to meet the most diverse product requirements. In addition, we have a wide range of technologies and techniques for refining the material.

SP GROUP A/S

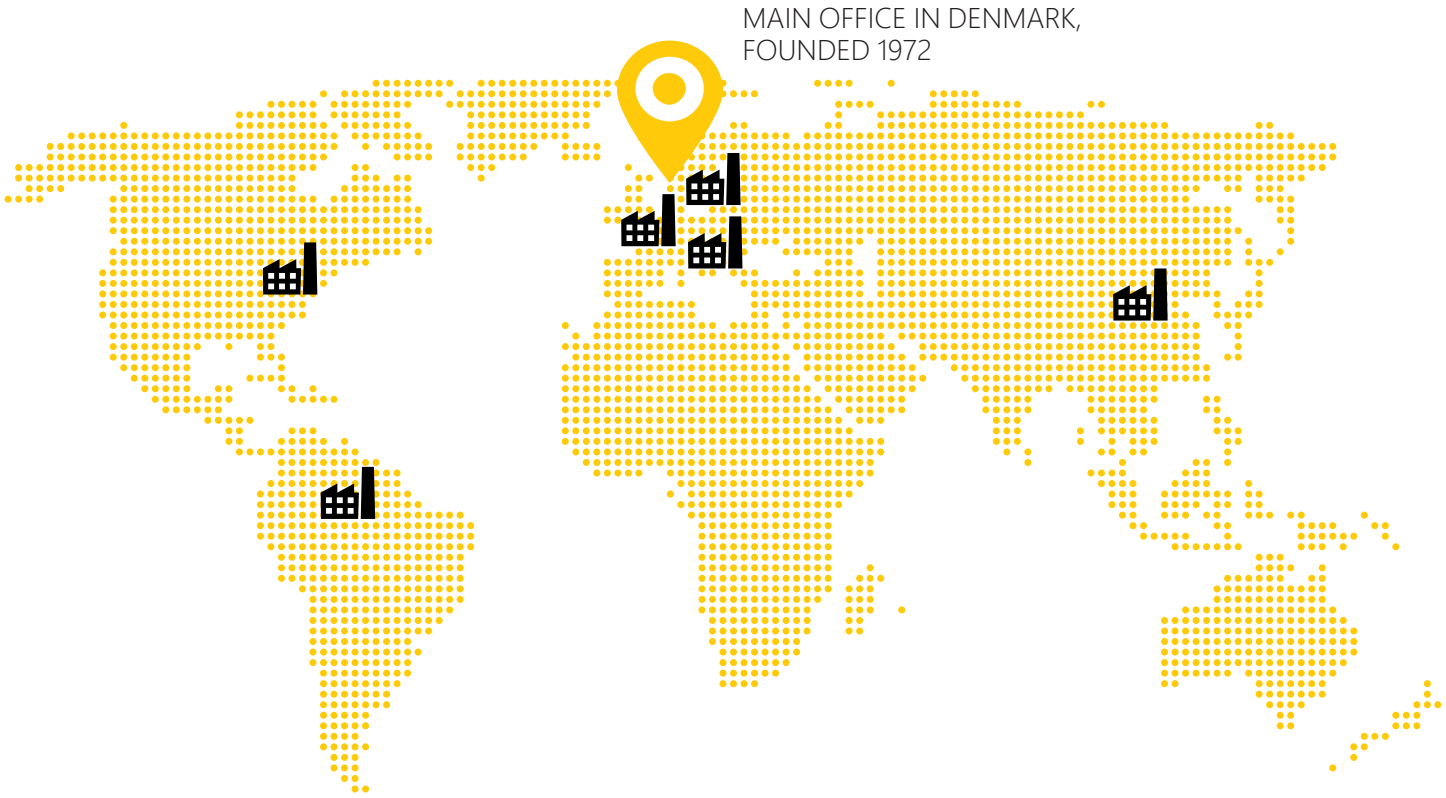

83 COUNTRIES

1.994 EMPLOYES

11 COUNTRIES

TINBY

Head quarter: Snavevej 6-10 · DK-5471 Søndersø
Produktion:
Tinby Sp. z o. o. · Ul. Zeromskiego 14 · PL-98220 Zdunska Wola
Tel. 04608 9029 7433 (Auftragsannahme)
Fax 04608 9029 17434 (Auftragsannahme)
E-mail: tinby@tinby.de
www.tinby.de